S/M Code No.91 – 085 DATE OF ISSUE 12/1991 – I

AIWA®

CU-DZ92M

SERVICE MANUAL

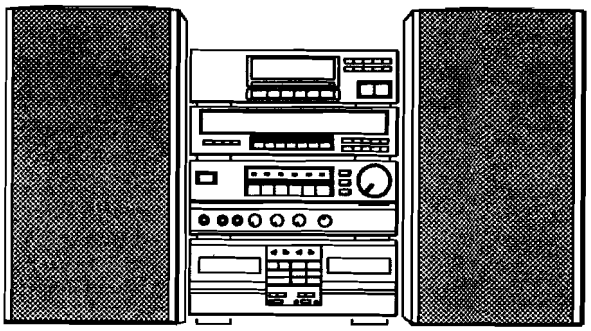

STEREO SYSTEM

• BASIC TAPE MECHANISM : α – 14MK II • TYPE. E,K,Z

CENTER SYSTEM	AMPLIFIER	CASSETTE DECK	TUNER	GRAPHIC EQUALIZER	REMOTE CONTROLLER	SPEAKER	CD PLAYER (OPTIONAL)	TURNTABLE (OPTIONAL)
CU – DZ92M	MX – Z92M	FX – WZ92	TX – Z92	GE – Z92	RC – TZ92ML	SX – Z92 ※1	※2 DX – Z92 ※2 DX – Z87 ※3 DX – M90M	※4 PX – E80

※1 CENTER SYSTEM dose not have ※1.

※2 As to the service information of DX – Z92/Z87, see the individual service manual of DX – Z92/Z87.

※3 As to the service information of DX – M90M, see the individual service manual of DX – M90M.

※4 As to the service information of PX – E80, see the individual service manual of PX – E80.

AIWA Co., Ltd. Tokyo Japan

Printed in Japan

TABLE OF CONTENTS

●SPECIFICATIONS……3
●TRANSISTOR ILLUSTRATION……4

MX-Z92M
●ELECTRICAL MAIN PARTS LIST……5~6
●IC DESCRIPTION……7~8
●SCHEMATIC DIAGRAM-1……9~10
●WIRING-1……11~12
●SCHEMATIC DIAGRAM-2……13~14
●WIRNG-2……15~16
●BLOCK DIAGRAM……17~18
●EXPLODED VIEW, MECHANICAL PARTS LIST……19~20

FX-WZ92
●CAUTIONS WHEN SERVICING……21
●ELECTRICAL MAIN PARTS LIST……22~23
●BLOCK DIAGRAM……24
●SCHEMATIC DIAGRAM……25~26
●WIRING……27~29
●ADJUSTMENT, PRACTICAL SERVICE FIGURE……30~31
●IC DESCRIPTION, IC BLOCK DIAGRAM……32~33
●EXPLODED VIEW-1, MECHANICAL PARTS LIST……34~35
●EXPLODED VIEW-2, MECHANICAL PARTS LIST……36~37
●EXPLODED VIEW-3, MECHANICAL PARTS LIST……38
●SPRING APPLICATION POSITION……39

TX-Z92
●CAUTIONS WHEN SERVICING……40
●ELECTRICAL MAIN PARTS LIST……41~42
●BLOCK DIAGRAM……43~44
●SCHEMATIC DIAGRAM-1……45~46
●WIRING-1……47~49
●WIRING-2……50~52
●SCHEMATIC DIAGRAM-2……53~54
●ADJUSTMENT, PRACTICAL SERVICE FIGURE, IC DESCRIPTION……55~58
●WIRING-3……59~50
●EXPLODED VIEW, MECHANICAL PARTS LIST……61~62

GE-Z92
●CAUTIONS WHEN SERVICING……63
●ELECTRICAL MAIN PARTS LIST, IC DESCRIPTION……64~65
●BLOCK DIAGRAM……66
●SCHEMATIC DIAGRAM……67~68
●WIRING……69~70
●PRACTICAL SERVICE FIGURE, IC BLOCK DIAGRAM……71~72
●EXPLODED VIEW, MECHANICAL PARTS LIST……73~74

SX-Z929
●DISASSEMBLY INSTRUCTIONS……75
●EXPLODED VIEW, SPEAKER LIST……76

■ACCESSORIES/PACKAGE LIST……77

SPECIFICATIONS

TUNER TX – Z92

<FM section>

Frequency range	87.5MHz to 108MHz
Usable sensitivity (IHF)	2.2 μ V (75ohms) 18.2dBf
Alternate channel selectivity	E, K : 50dB (± 400kHz)
	Z : 60dB (± 300kHz)
Signal-to-noise ratio	70dB (STEREO), 78dB (MONO)
Harmonic distortion	0.3 % (MONO), 1kHz
	0.8 % (STEREO), 1kHz
Frequency response	20Hz to 15kHz (+ 0.5dB, – 3dB)
Stereo separation	40dB at 1kHz
Antenna	75ohms (unbalanced)

<MW section>

Frequency range	522kHz to 1.611kHz
Usable sensitivity	400 μ V/m
Selectivity	22dB (9kHz)
Signal-to-noise ratio	53dB (100dB input)
Antenna	Loop antenna

<LW section>

Frequency range	144kHz to 290kHz
Usable sensitivity	1,000 μ V/m
Antenna	Loop antenna

<Timer section and general>

Program timer	"Once" and/or "every"
Sleep timer	Capable of setting in 10-minute
	Increments, 99 minutes maximum
Dimensions (W × H × D)	360 × 88 × 316mm
	(14¼ × 3½ × 12½ in.)
Weight	2.4kg (5.28lb.)

AMPLIFIER MX – Z92M

Power output	63W + 63W (6ohms + 16ohms
	total, T. H. D. 10 %, RMS)
	50W + 50W (6ohms + 16ohms
	total, T. H. D. 1 %, DIN)
Harmonic distortion	0.05 % (25W, 1kHz, 6ohms)
Input sensitivity (load impedance)	
	VIDEO 1/DAT. :
	650mV (47kohms)
	VIDEO 2 : 650mV (47kohms)
	AUX/PHONO :
	280mV or more (47kohms)
Signal-to-noise ratio	84dB
Power requirements	E, Z : 220V AC, 50Hz
	K : 240V AC, 50Hz
Power consumption	280W (System total 310W)
Dimensions (W × H × D)	360 × 128 × 332.5mm
	(14¼ × 5⅛ × 13⅛ in.)
Weight	5.8kg (12.76lb.)

CASSETTE DECK FX – WZ92

Track format	4tracks, 2 channels
Frequency response	METAL tape : 20 – 17,000Hz
	CrO_2 tape : 20 – 16,000Hz
	Normal tape : 20 – 15,000Hz
Signal-to-noise ratio	65dB (DOLBY NR ON, METAL
	tape peak level above 5kHz)
Wow and flutter	0.12 % (WRMS) ± 0.19 %
	(WPEAK)
Tape speed	4.8cm/sec. (1⅞ ips)
	9.5cm/sec.(double speed)
Rewind time	120sec.(C – 60)
Fast forward time	120sec.(C – 60)
Recording system	AC bias
Erase system	AC erase
Motor	DC servomotor × 2
Heads	Playback head × 1 (deck 1)
	Record/playback/erase head × 1
	(deck 2)
Dimensions (W × H × D)	360 × 128 × 306.5mm
	(14¼ × 5⅛ × 12⅛ in.)
Weight	3.5kg (7.7lb.)

GRAPHIC EQUALIZER GE – Z92

Input	210mV (47kohms)
Output	210mV (47kohms)
Dimensions (W × H × D)	360 × 88 × 306.8mm
	(14¼ × 3½ × 12⅛ in.)
Weight	2.7kg (5.94lb.)

SPEAKER SX – Z92

Cabinet type	3 way, bass reflex
Speaker	220mm cone type woofer
	60mm cone type tweeter
	30mm ceramic type super
	tweeter
Impedance	6ohms
Music power	70W
Output sound pressure level	89dB/W/m
Dimensions (W × H × D)	286 × 520 × 220mm
	(11⅜ 20½ × 7⅞ in.)
Weight	5.2kg (11.44lb.)

COMMON SECTION

Dimensions (W × H × D)	932 × 520 × 332.5mm
	(36¾ × 20½ × 13⅛ in.)
	(vertical placement)
	1,292 × 520 × 332.5mm
	(50⅞ × 20½ × 13⅛ in.)
	(horizontal placement)
Weight	24.8kg (54.56lb.)

- Design and specifications are subject to change without notice.
- Noise reduction system manufactured under license from Dolby Laboratories Licensing Corporation.
- "Dolby", the double-D symbol are trademarks of Dolby Laboratories Licensing Corporation.
- The word "BBE" and the "BBE symbol" are trademarks of BBE Sound, Inc.
- Under license from BBE Sound, Inc.

TRANSISTOR ILLUSTRATION (MX – Z92M, FX – WZ92, TX – Z92, GE – Z92)

2SK302

2SC3331

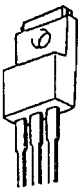

2SB1370

2SA933
2SA952
2SA1048
2SA1015
2SA1296
2SA1318
2SC1623
2SC1740
2SC1815
2SC2001
2SC2458
2SC2712
2SC2714
2SC3266
2SC3326
2SD655

2SK209
2SK373

DTA114
DTA123
DTA144
DTC144

MODEL NO.

MX — Z92M

ELECTRICAL MAIN PARTS LIST (MX — Z92M)

REF. NO.	PART NO.	DESCRIPTION
=== IC ===		
	87-001-440-019	IC, BA15218N
	87-002-247-019	IC, BU4052B
	87-002-260-019	IC, BU4066BL
	81-VP1-630-010	IC, LC6543H-4674
	87-002-239-010	IC, LM3364K-15
	87-027-895-010	IC, M5218AL
	87-001-582-019	IC, STK4152-2
	87-027-958-019	IC, TC4051BP
	87-027-938-019	IC, TC4053BP
	87-001-883-010	IC, XRC5424B
=== TRANSISTOR ===		
	87-026-463-019	TRANSISTOR, 2SA933S(RS)
	89-110-155-019	TRANSISTOR, 2SA1015GR
	89-113-187-819	TRANSISTOR, 2SA1318 TU
	89-213-702-019	TRANSISTOR, 2SB1370E
	87-026-462-019	TRANSISTOR, 2SC1740S(RS)
	89-332-665-019	TRANSISTOR, 2SC3266GR
	89-333-317-819	TRANSISTOR, 2SC3331 TU
	89-406-555-019	TRANSISTOR, 2SD655E
	87-026-219-019	TRANSISTOR, DTA144ES
=== DIODE ===		
	87-020-691-019	DIODE, 1SS132
	87-002-225-019	DIODE, DBF 40C-K10
	87-001-845-019	DIODE, RS203L
	87-027-301-019	DIODE, ZENER HZ3A1
	87-027-258-019	DIODE, ZENER HZ3B2
	87-027-416-019	DIODE, ZENER HZ3C2
	87-027-555-019	DIODE, ZENER HZ5C2
	87-027-552-019	DIODE, ZENER HZ6B3L
	87-001-916-019	DIODE, ZENER UTZJ10B
=== MAIN CIRCUIT BOARD SECTION ===		
C101	★87-018-195-019	CAP, CERA-SOL 1200P-16 X
C102	★87-018-195-019	CAP, CERA-SOL 1200P-16 X
C103	★87-010-544-019	CAP, ELECT 0.1-50
C104	★87-010-544-019	CAP, ELECT 0.1-50
C105	★87-018-123-019	CAP, CERA-SOL 220P-50 B
C106	★87-018-123-019	CAP, CERA-SOL 220P-50 B
C107	★87-010-402-019	CAP, ELECT 2.2-50 SME
C108	★87-010-370-019	CAP, ELECT 330-6.3 SME
C109	★87-010-544-019	CAP, ELECT 0.1-50
C110	★87-018-128-019	CAP, CERA-SOL 560P-50 B
C111	★87-010-404-019	CAP, ELECT 4.7-50 SME
C201	★87-010-260-019	CAP, ELECT 47-25 SME
C202	★87-010-101-019	CAP, ELECT 220-16 SME
C203	★87-018-127-019	CAP, CERA-SOL 470P-50 B
C204	★87-018-127-019	CAP, CERA-SOL 470P-50 B
C205	★87-010-404-019	CAP, ELECT 4.7-50 SME
C206	★87-010-370-019	CAP, ELECT 330-6.3 SME
C207	★87-010-401-019	CAP, ELECT 1-50 SME
C208	★87-010-401-019	CAP, ELECT 1-50 SME
C211	★87-010-546-019	CAP, ELECT 0.33-50 SME
C212	★87-010-546-019	CAP, ELECT 0.33-50 SME
C215	★87-010-404-019	CAP, ELECT 4.7-50 SME
C216	★87-010-404-019	CAP, ELECT 4.7-50 SME
C217	★87-010-400-019	CAP, ELECT 0.47-50 SME
C218	★87-010-400-019	CAP, ELECT 0.47-50 SME
C223	★87-010-400-019	CAP, ELECT 0.47-50 SME
C224	★87-010-400-019	CAP, ELECT 0.47-50 SME
C225	★87-010-404-019	CAP, ELECT 4.7-50 SME
C226	★87-010-404-019	CAP, ELECT 4.7-50 SME
C227	★87-010-404-019	CAP, ELECT 4.7-50 SME
C228	★87-010-404-019	CAP, ELECT 4.7-50 SME
C229	★87-010-405-019	CAP, ELECT 10-50 SME
C231	★87-018-109-019	CAP, CERA-SOL 22P-50 SL
C232	★87-018-109-019	CAP, CERA-SOL 22P-50 SL
C301	★87-010-400-019	CAP, ELECT 0.47-50 SME
C302	★87-010-400-019	CAP, ELECT 0.47-50 SME
C303	★87-018-119-019	CAP, CERA-SOL 100P-50 B
C304	★87-018-119-019	CAP, CERA-SOL 100P-50 B
C305	★87-010-404-019	CAP, ELECT 4.7-50 SME
C306	★87-010-404-019	CAP, ELECT 4.7-50 SME
C308	★87-018-214-019	CAP, CERA-SOL 0.1-50 F
C309	★87-018-134-019	CAP, CERA-SOL 0.01-16 Y
C310	★87-010-263-019	CAP, ELECT 100-10
C311	★87-010-221-019	CAP, ELECT 470-10
C312	★87-010-221-019	CAP, ELECT 470-10
C313	★87-010-260-019	CAP, ELECT 47-25 SME
C314	★87-010-260-019	CAP, ELECT 47-25 SME
C315	★87-010-221-019	CAP, ELECT 470-10
C317	★87-010-405-019	CAP, ELECT 10-50 SME
C318	★87-018-134-019	CAP, CERA-SOL 0.01-16Y(Z ONLY)
C319	★87-018-134-019	CAP, CERA-SOL 0.01-16Y(Z ONLY)
C401	★87-010-401-019	CAP, ELECT 1-50 SME
C402	★87-010-401-019	CAP, ELECT 1-50 SME
C405	★87-010-545-019	CAP, ELECT 0.22-50 SME
C406	★87-010-545-019	CAP, ELECT 0.22-50 SME
C409	★87-018-119-019	CAP, CERA-SOL 100P-50B(Z ONLY)
C410	★87-018-119-019	CAP, CERA-SOL 100P-50B(Z ONLY)
C411	★87-018-134-019	CAP, CERA-SOL 0.01-16Y(Z ONLY)
C412	★87-018-134-019	CAP, CERA-SOL 0.01-16Y(Z ONLY)
C413	★87-010-545-019	CAP, ELECT 0.22-50 SME
C414	★87-010-545-019	CAP, ELECT 0.22-50 SME
C415	★87-010-402-019	CAP, ELECT 2.2-50 SME
C416	★87-010-402-019	CAP, ELECT 2.2-50 SME
C417	★87-010-402-019	CAP, ELECT 2.2-50 SME
C418	★87-010-402-019	CAP, ELECT 2.2-50 SME
C419	★87-010-401-019	CAP, ELECT 1-50 SME
C420	★87-010-401-019	CAP, ELECT 1-50 SME
C421	★87-018-199-019	CAP, CERA-SOL 3300P-16 X
C422	★87-018-199-019	CAP, CERA-SOL 3300P-16 X
C423	★87-010-546-019	CAP, ELECT 0.33-50 SME
C424	★87-010-401-019	CAP, ELECT 1-50 SME
C425	★87-010-400-019	CAP, ELECT 0.47-50 SME
C426	★87-010-370-019	CAP, ELECT 330-6.3 SME
C427	★87-018-134-019	CAP, CERA-SOL 0.01-16Y(Z ONLY)
C428	★87-010-405-019	CAP, ELECT 10-50 SME
C501	★87-018-127-019	CAP, CERA-SOL 470P-50 B
C502	★87-018-127-019	CAP, CERA-SOL 470P-50 B
C503	★87-010-402-019	CAP, ELECT 2.2-50 SME
C504	★87-010-402-019	CAP, ELECT 2.2-50 SME
C505	★87-018-123-019	CAP, CERA-SOL 220P-50 B
C506	★87-018-123-019	CAP, CERA-SOL 220P-50 B
C507	★87-010-405-019	CAP, ELECT 10-50 SME
C508	★87-010-405-019	CAP, ELECT 10-50 SME
C509	★87-018-140-019	CAP, CERA-SOL 2.2P-50 CH
C510	★87-018-140-019	CAP, CERA-SOL 2.2P-50 CH
C511	★87-010-260-019	CAP, ELECT 47-25 SME
C512	★87-010-260-019	CAP, ELECT 47-25 SME
C515	★87-018-214-019	CAP, CERA-SOL 0.1-50 F
C516	★87-018-214-019	CAP, CERA-SOL 0.1-50 F
C517	★87-018-132-019	CAP, CERA-SOL 2200P-16X(Z ONLY)
C518	★87-018-132-019	CAP, CERA-SOL 2200P-16X(Z ONLY)
C519	★87-018-214-019	CAP, CERA-SOL 0.1-50F(Z ONLY)

REF. NO.	PART NO.	DESCRIPTION
C520	★87-018-214-019	CAP, CERA-SOL 0.1-50F(Z ONLY)
C521	★87-010-408-019	CAP, ELECT 47-50 SME
C601	★87-010-804-019	CAP, ELECT 4700-42V
C602	★87-010-804-019	CAP, ELECT 4700-42V
C603	★87-010-405-019	CAP, ELECT 10-50 SME
C604	★87-010-390-019	CAP, ELECT 3300-25V SME
C605	★87-018-127-019	CAP, CERA-SOL 470P-50 B
C606	★87-010-405-019	CAP, ELECT 10-50 SME
C607	★87-010-260-019	CAP, ELECT 47-25 SME
C608	★87-010-101-019	CAP, ELECT 220-16 SME
C609	★87-010-381-019	CAP, ELECT 330-16 SME
C610	★87-010-403-019	CAP, ELECT 3.3-50 SME
C611	★87-010-374-019	CAP, ELECT 47-10
C612	★87-018-134-019	CAP, CERA-SOL 0.01-16 Y
J101	87-009-204-019	JACK, 6.3 YKB21-5012(MIC-1)
J102	87-009-204-019	JACK, 6.3 YKB21-5012(MIC-2)
J301	★81-VP1-634-010	JACK, PIN 3P(VCR 1/DAT, REC OUT)
J302	★81-VP1-634-010	JACK, PIN 3P(VCR 1/DAT, IN)
J303	★81-VP1-634-010	JACK, PIN 3P(VCR 2, IN)
J304	★81-VP1-635-010	JACK, PIN 3P(MONITOR OUT/CD IN)
J305	★87-009-390-010	JACK, PIN 2P(AUX/PHONO IN)
J306	87-009-063-019	CONNECTOR, 11P FG(CD)
J307	87-009-065-019	CONNECTOR, 15P FG(TUNER)
J308	81-VP1-621-010	CORD, FG 11P 700(GEQ)
J501	★87-009-393-010	JACK, PIN 2P EARTH(SURROUND SP)
J502	★87-033-225-010	TERMINAL, SP-4P N(SPEAKERS)
J503	81-669-655-019	JACK, 6.3 W/S AU(PHONES)
L501	87-005-366-019	COIL, 1UH(Z ONLY)
L502	87-005-366-019	COIL, 1UH(Z ONLY)
R437	★87-022-050-019	RES, MF 1W-0.22
R438	★87-022-050-019	RES, MF 1W-0.22
R439	★87-022-050-019	RES, MF 1W-0.22
R440	★87-022-050-019	RES, MF 1W-0.22
R601	★87-022-050-019	RES, MF 1W-0.22
R602	★87-022-050-019	RES, MF 1W-0.22
RY601	★87-045-285-010	RELAY, VB12MB
VR101	★81-VP1-622-019	VOLUME, 10KA(KARAOKE MIC MIX)
VR201	★81-VP1-623-019	VOLUME, 20KA(BBE)
VR301	★81-VP1-625-019	VOLUME, 50KB(INPUT LEVEL)
VR401	★81-VP1-627-019	VOLUME, 100KW(BALANCE)
VR402	★81-VP1-624-019	VOLUME, 500KA(T-BASS)
::: FRONT CIRCUIT BOARD SECTION :::		
C701	★87-010-370-019	CAP, ELECT 330-6.3 SME
C702	★87-018-214-019	CAP, CERA-SOL 0.1-50 F
C704	★87-010-403-019	CAP, ELECT 3.3-50 SME
C705	★87-018-195-019	CAP, CERA-SOL 1200P-16 X
C706	★87-018-195-019	CAP, CERA-SOL 1200P-16 X
L701	★87-003-152-019	COIL, 100UH
LED701	★87-001-124-019	LED SLZ 381C-02-T1(T-BASS)
LED702	★87-001-124-019	LED SLZ 381C-02-T1(T-BASS)
LED703	★87-001-124-019	LED SLZ 381C-02-T1(BBE)
LED704	★87-001-124-019	LED SLZ 381C-02-T1(BBE)
LED705	★87-001-124-019	LED SLZ 381C-02-T1(TAPE)
LED706	★87-001-124-019	LED SLZ 381C-02-T1(TUNER)
LED707	★87-001-124-019	LED SLZ 381C-02-T1(AUX/PHONO)
LED708	★87-001-124-019	LED SLZ 381C-02-T1(CD)
LED709	★87-001-124-019	LED SLZ 381C-02-T1(VIDEO 1/DAT)
LED710	★87-001-124-019	LED SLZ 381C-02-T1(VIDEO 2)
S701	87-036-142-019	TACT SW EVQ-11404M(TAPE)
S702	87-036-142-019	TACT SW EVQ-11404M(TUNER)
S703	87-036-142-019	TACT SW EVQ-11404M(AUX/PHONO)
S704	87-036-142-019	TACT SW EVQ-11404M(CD)
S705	87-036-142-019	TACT SW EVQ-11404M(VIDEO 1/DAT)
S706	87-036-142-019	TACT SW EVQ-11404M(VIDEO 2)
S707	87-036-142-019	TACT SW EVQ-11404M(POWER)
S708	87-036-142-089	TACT SW EVQ-11404M(BBE)
S709	87-036-142-019	TACT SW EVQ-11404M(T-BASS)
S710	87-036-142-019	TACT SW EVQ-11404M(MUTING)
X701	★89-MX1-704-019	CERALOCK(MU)3.9MHZ
::: POWER-2 CIRCUIT BOARD SECTION :::		
R651	★87-022-184-019	RES, MF 0.33-1W
R652	★87-022-200-019	RES, MF 0.56-1W
R653	★87-022-200-019	RES, MF 0.56-1W
R654	★87-022-184-019	RES, MF 0.33-1W
::: VOLUME CIRCUIT BOARD SECTION :::		
VR701	87-024-386-019	VOLUME, 50KA(VOLUME)
::: LED CIRCUIT BOARD SECTION :::		
LED711	★87-001-123-019	LED SLZ 981C-02TI(VOLUME)
::: MISCELLANEOUS :::		
⚠	87-034-781-018	AC CORD E(E, Z MODEL)
⚠	87-085-185-010	BUSHING, AC CORD E
	87-034-592-018	AC CORD K(K MODEL)
⚠PT601	81-VP1-603-118	POWER TRANSFORMER E(E, Z MODEL)
⚠PT601	81-VP1-602-019	POWER TRANSFORMER K(MODEL)

IC DESCRIPTION (MX – Z92M)

IC,LC6543H – 4674

Pin No.	Pin Name	I/O	Description
1	O – $\overline{\text{LED}}$	O	Output to drive th volume LED. Goes "L" when power is turned on (however, flashes at a cycle of second when muting is activated by key input and for approx. 4 seconds after power is turned on).
2	VDD	–	Connected to + 5.6V.
3	O – $\overline{\text{DIRECT}}$	O	Output to switch the source to be recorded by the deck. "L" during CD, HSP REC
4	O – $\overline{\text{REC MUTE}}$	O	Muting output of VIDEO 1 recording source. Goes "L" when power is turned off or the function is set to VIDEO 1/DAT.
5	O – VIDEO 1	O	Output to switch the video monitor output. Goes "H" during VIDEO 1 output.
6	O – $\overline{\text{T – BASS}}$	O	Output to switch T-BASS ON/OFF. Goes "L" when T-BASS is ON.
7	O – $\overline{\text{BBE}}$	O	Output to switch BBE ON/OFF. Goes "L" when BBE is ON.
8	O – $\overline{\text{VR – UP}}$	O	Outputs to turn the electric power volume up and down, caused by the key inputs from the remote control.
9	O – $\overline{\text{VR – DOWN}}$		
10	O – $\overline{\text{POWER}}$	O	POWER ON signal output. Goes "L" when power is turned on.
11	O – FUNC • A	O	Outputs to switch the input signal to the function instructed by the remote control or function key using TC4051BP.
12	O – FUNC • B		
13	O – FUNC • C		
14	O – MUTE	O	Output to mute the audio output. Goes "H" when muted.
15	O – OSC2	O	A ceramic oscillator which generates system clock pulses is connected.
16	O – OSC1	I	
17	TEST	–	Connected to ground.
18	VSS	–	Connected to ground.
19	I – $\overline{\text{RESET}}$	I	System reset input.
20	I/O – $\overline{\text{SERIAL}}$	I/O	Serial data input/output of another category (TUNER, CD, DAT, etc.)
21	I • $\overline{\text{REMOTE}}$	I	Serial data input from the remote infrared receiver.
22	I/O – $\overline{\text{D0}}$	I/O	• Key matrix data input/output pins • POWER, BBE, T-BASS, MUTE and KEY are accessed in sequence. • All indicators go off when power is turned off. Only the POWER key is accepted at this time. ※ Refer to a separate sheet for the key matrix.
23	I/O – $\overline{\text{D1}}$		
24	I/O – $\overline{\text{D2}}$		
25	I/O – $\overline{\text{D3}}$		
26	I/O – $\overline{\text{D4}}$		
27	I/O – $\overline{\text{D5}}$		
28	O – $\overline{\text{KS0}}$	O	Key matrix scan outputs. Refer to the separate sheet for the timing.
29	O – $\overline{\text{KS1}}$		
30	O – $\overline{\text{DISP}}$	O	Key matrix display output. Refer to the separate sheet for the timing.

* KEY MATRIX

FUNCTION NAME	FUNCTION KEY DATA INPUT		
	KSCAN 0 is "L"	KSCAN 1 is "L"	Lights when DISP is "L"
D0	POWER Key input	TAPE Key input	TAPE LED display
D1		TUNER Key input	TUNER LED display
D2	BBE Key input	AUX/PHONO Key input	AUX/PHONO LED display
D3	T – BASS Key input	CD Key input	CD LED display
D4	MUTE Key input	DAT/VIDEO 1 Key input	DAT/VIDEO 1 LED display
D5	Easy operation switch input	VIDEO 2 Key input	VIDEO 2 LED display

* SCAN TIMING

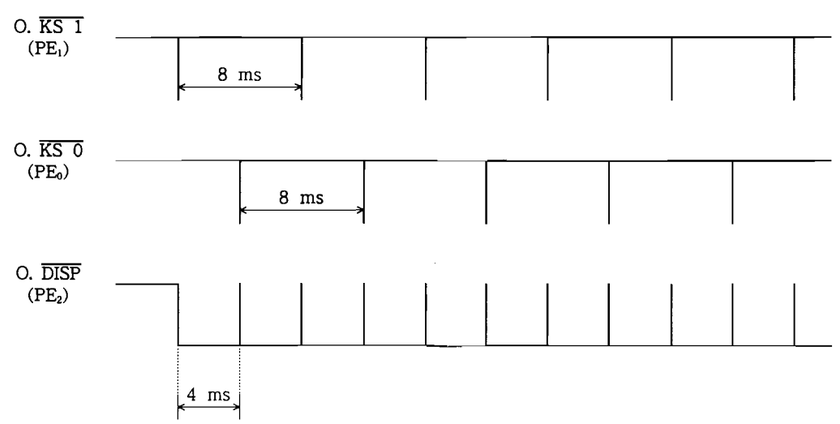

SCHEMATIC DIAGRAM – 1 (MX – Z92M)

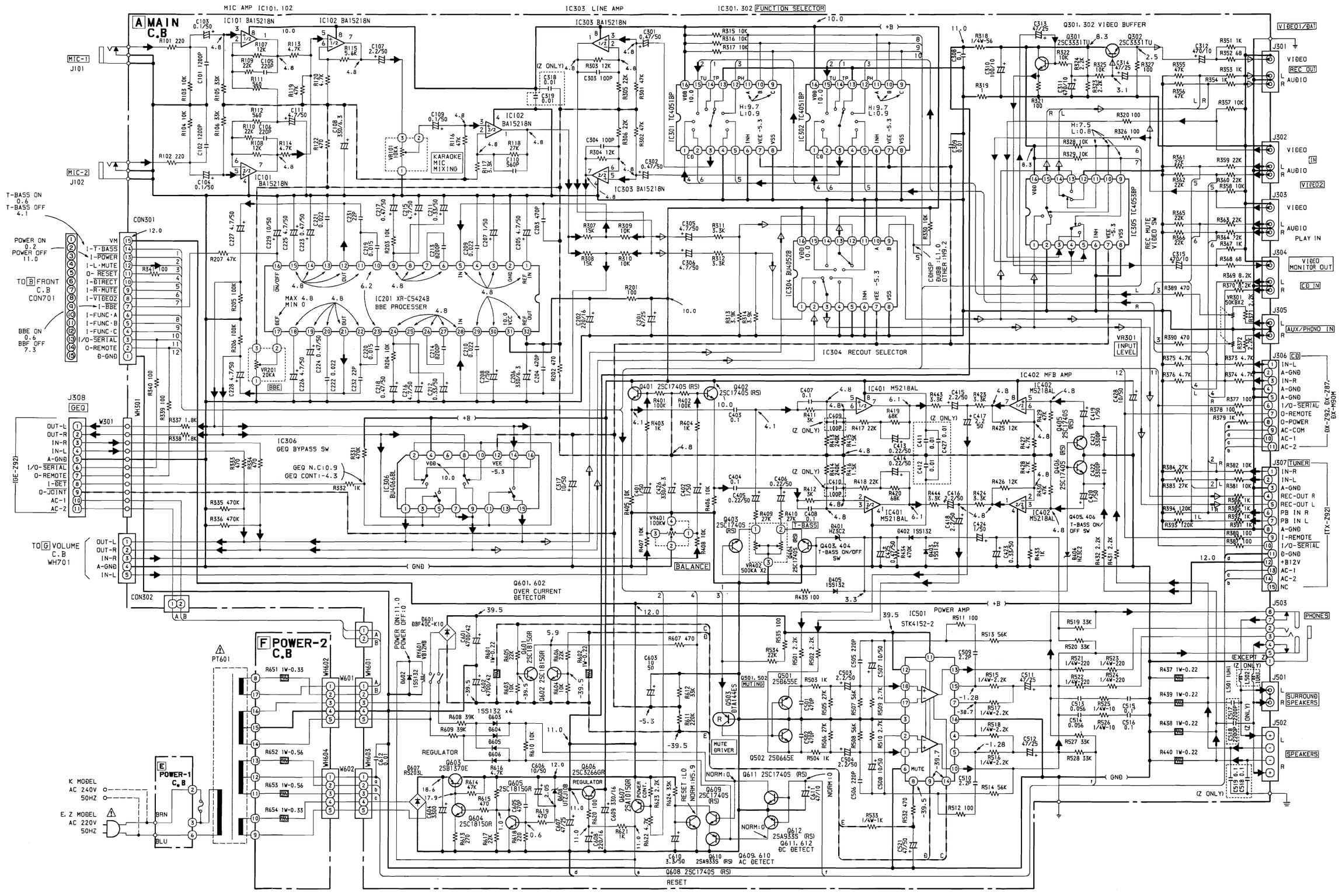

GRAPHIC SYMBOLS PRINTED CIRCUIT BOARD OF ELECT. CAP. ARE DESIGNED AS NEGATIVE POLE.

(プリント基板内のケミコンの極性表示はθ表示です。)

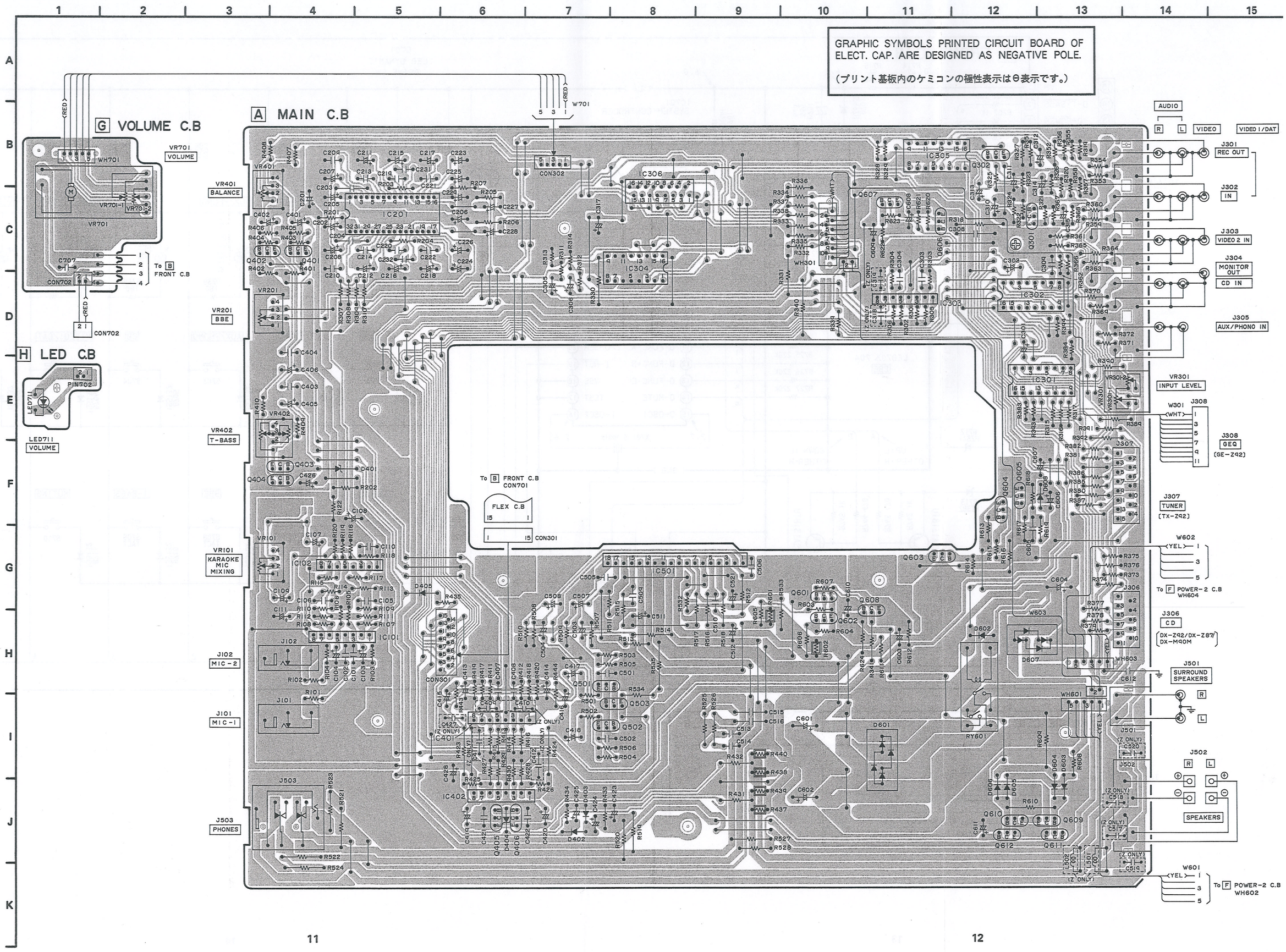

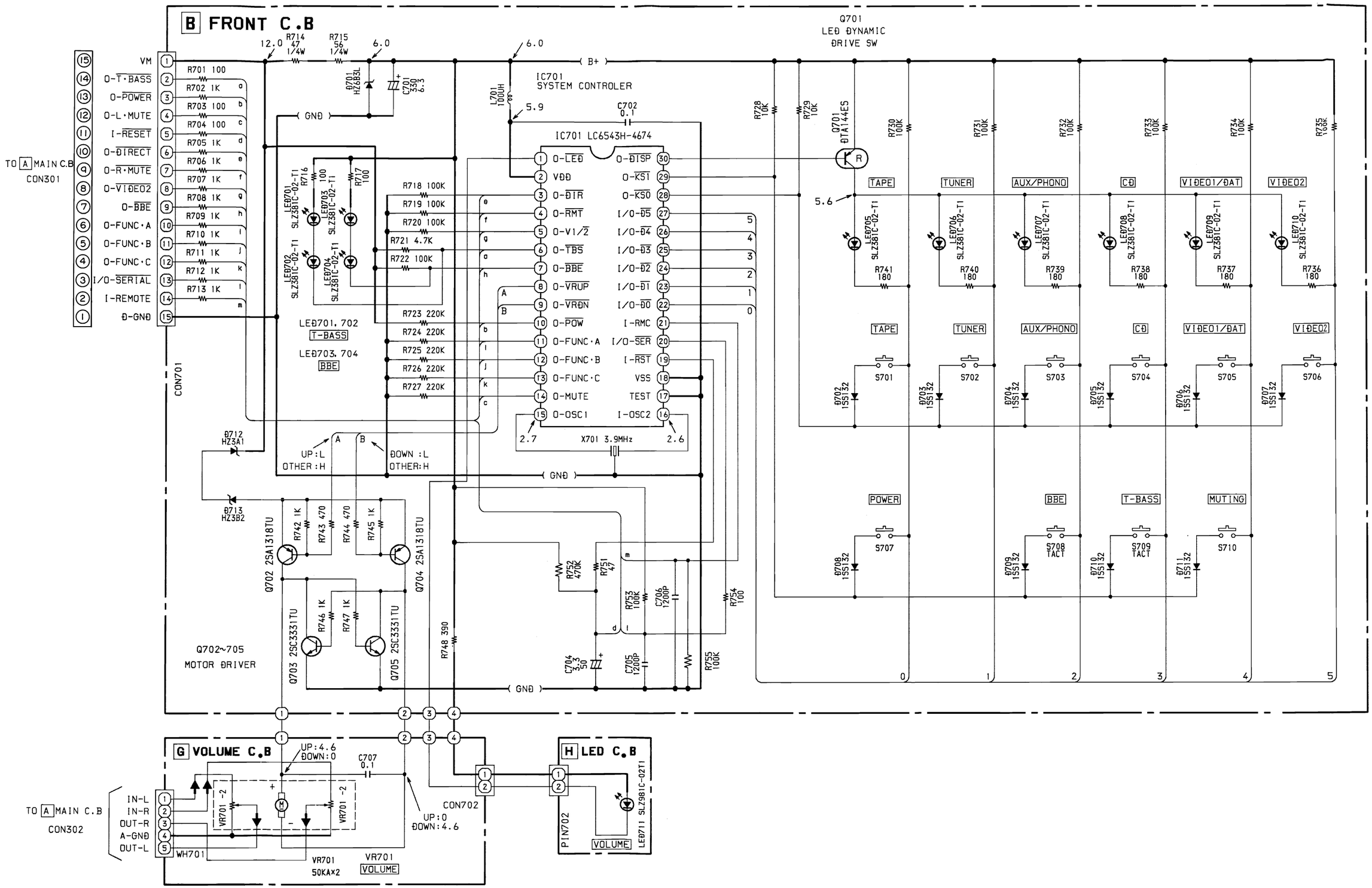
B FRONT C.B
TO A MAIN C.B
CON301
CON701
VM
O-T·BASS
O-POWER
O-L·MUTE
I-RESET
O-DIRECT
O-R·MUTE
O-VIDEO2
O-BBE
O-FUNC·A
O-FUNC·B
O-FUNC·C
I/O-SERIAL
I-REMOTE
Đ-GNĐ
R701 100
R702 1K
R703 100
R704 100
R705 1K
R706 1K
R707 1K
R708 1K
R709 1K
R710 1K
R711 1K
R712 1K
R713 1K
12.0
R714 47 1/4W
R715 56 1/4W
6.0
Đ701 HZ6B3L
C701 330 6.3
GNĐ
B+
L701 100UH
5.9
C702 0.1
IC701 SYSTEM CONTROLER
IC701 LC6543H-4674
O-LEĐ
VĐĐ
O-DIR
O-RMT
O-V1/2
O-TBS
O-BBE
O-VRUP
O-VRĐN
O-POW
O-FUNC·A
O-FUNC·B
O-FUNC·C
O-MUTE
O-OSC1
O-DISP
O-KS1
O-KS0
I/O-D5
I/O-D4
I/O-D3
I/O-D2
I/O-D1
I/O-D0
I-RMC
I/O-SER
I-RST
VSS
TEST
I-OSC2
X701 3.9MHz
2.7
2.6
R718 100K
R719 100K
R720 100K
R721 4.7K
R722 100K
R723 220K
R724 220K
R725 220K
R726 220K
R727 220K
LEĐ701 SLZ381C-02-T1 R716 100
LEĐ703 SLZ381C-02-T1 R717 100
LEĐ702 SLZ381C-02-T1
LEĐ704 SLZ381C-02-T1
LEĐ701, 702
T-BASS
LEĐ703, 704
BBE
UP:L
OTHER:H
ĐOWN:L
OTHER:H
Đ712 HZ3A1
Đ713 HZ3B2
Q702 2SA1318TU
Q704 2SA1318TU
Q703 2SC3331TU
Q705 2SC3331TU
R742 1K
R743 470
R744 470
R745 1K
R746 1K
R747 1K
R748 390
R751 47
R752 470K
R753 100K
R754 100
C704 4.7 50
C705 1200P
C706 1200P
R755 100K
Q702~705
MOTOR ĐRIVER
Q701
LEĐ ĐYNAMIC
ĐRIVE SW
Q701 DTA144ES
R728 10K
R729 10K
R730 100K
R731 100K
R732 100K
R733 100K
R734 100K
R735 100K
5.6
TAPE
TUNER
AUX/PHONO
CĐ
VIĐEO1/ĐAT
VIĐEO2
LEĐ705 SLZ381C-02-T1
LEĐ706 SLZ381C-02-T1
LEĐ707 SLZ381C-02-T1
LEĐ708 SLZ381C-02-T1
LEĐ709 SLZ381C-02-T1
LEĐ710 SLZ381C-02-T1
R741 180
R740 180
R739 180
R738 180
R737 180
R736 180
Đ702 1SS132
Đ703 1SS132
Đ704 1SS132
Đ705 1SS132
Đ706 1SS132
Đ707 1SS132
S701
S702
S703
S704
S705
S706
POWER
BBE
T-BASS
MUTING
Đ708 1SS132
Đ709 1SS132
Đ710 1SS132
Đ711 1SS132
S707
S708 TACT
S709 TACT
S710
0
1
2
3
4
5
G VOLUME C.B
UP:4.6
ĐOWN:0
C707 0.1
CON702
UP:0
ĐOWN:4.6
TO A MAIN C.B
CON302
IN-L
IN-R
OUT-R
A-GNĐ
OUT-L
WH701
VR701 -2
VR701 -2
VR701
50KA×2
VR701
VOLUME
H LED C.B
PIN702
VOLUME
LEĐ711 SLZ981C-02T1

GRAPHIC SYMBOLS PRINTED CIRCUIT BOARD OF ELECT. CAP. ARE DESIGNED AS NEGATIVE POLE.

（プリント基板内のケミコンの極性表示はθ表示です。）

B FRONT C.B

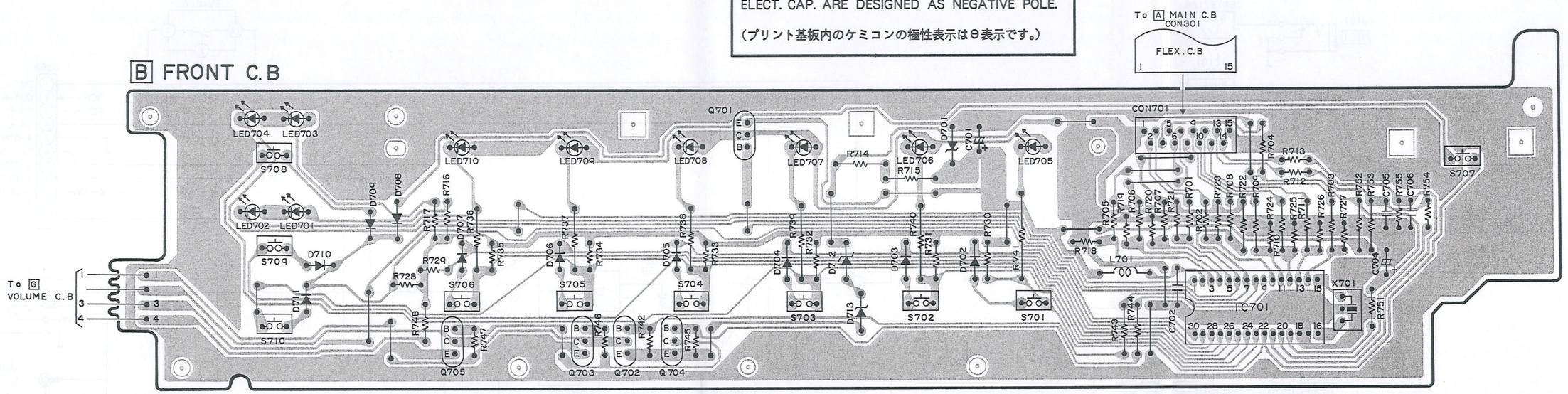

E POWER-1 C.B

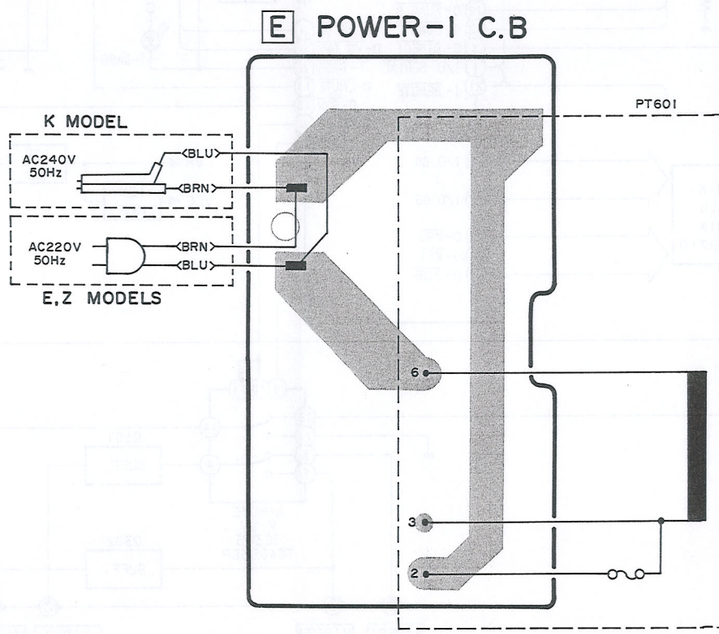

F POWER-2 C.B

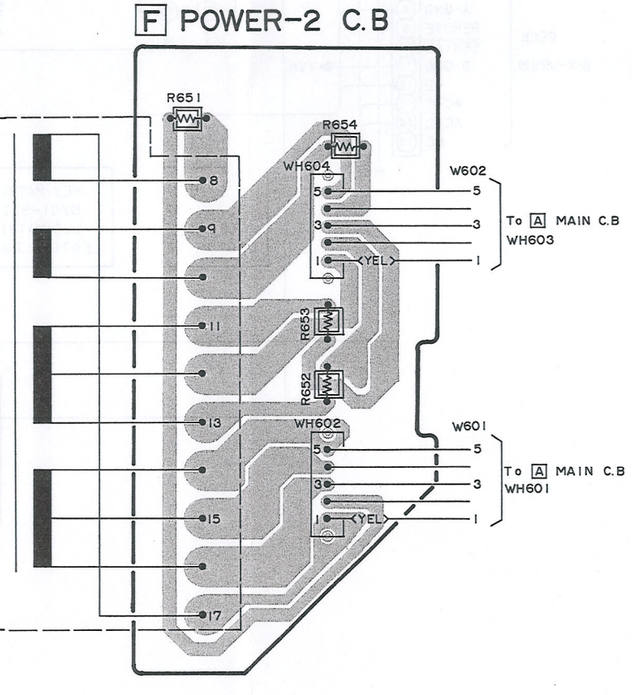

BLOCK DIAGRAM (MX – Z92M)

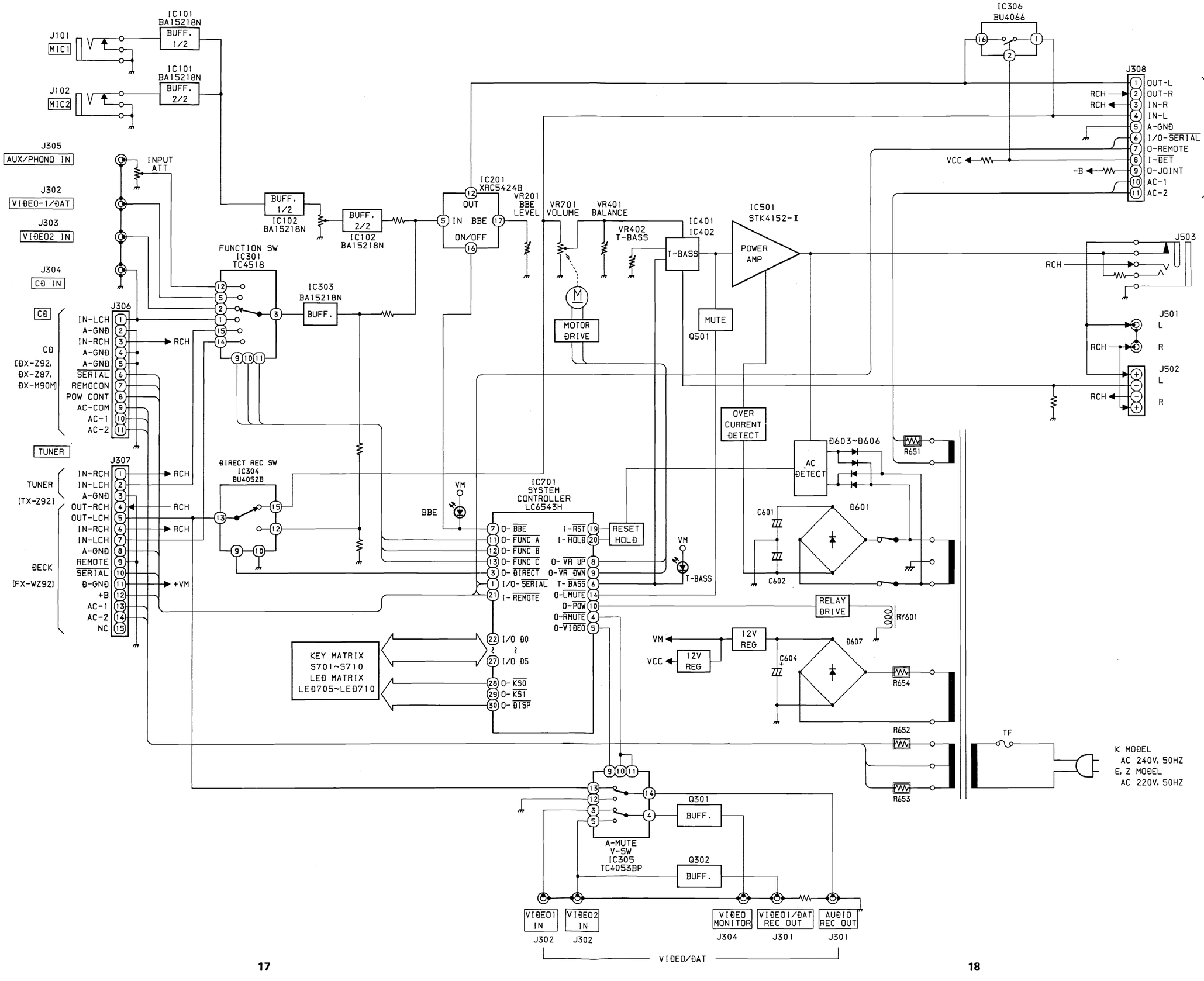

EXPLODED VIEW (MX – Z92M)

REF.NO.	PART NO.	DESCRIPTION
A	87-067-584-019	BVT$_2$+3-6 W/O SLOT
B	87-067-660-019	BVT$_2$+3-8 W/O SLOT (B)
C	87-067-758-019	BVT$_2$+3-12 W/O SLOT
D	87-067-581-019	BVT$_2$+3-15 W/O SLOT
E	87-067-673-019	BVTT+3-8 (B)
F	87-067-586-019	BVTT+4-8
G	87-591-094-419	QIT+3-6
H	87-067-641-019	UTT$_2$+3-8 W/O SLOT (B)
I	87-561-095-219	VFT$_1$+3-8
J	80-VP2-202-010	S-SCREW VT$_2$ (B)

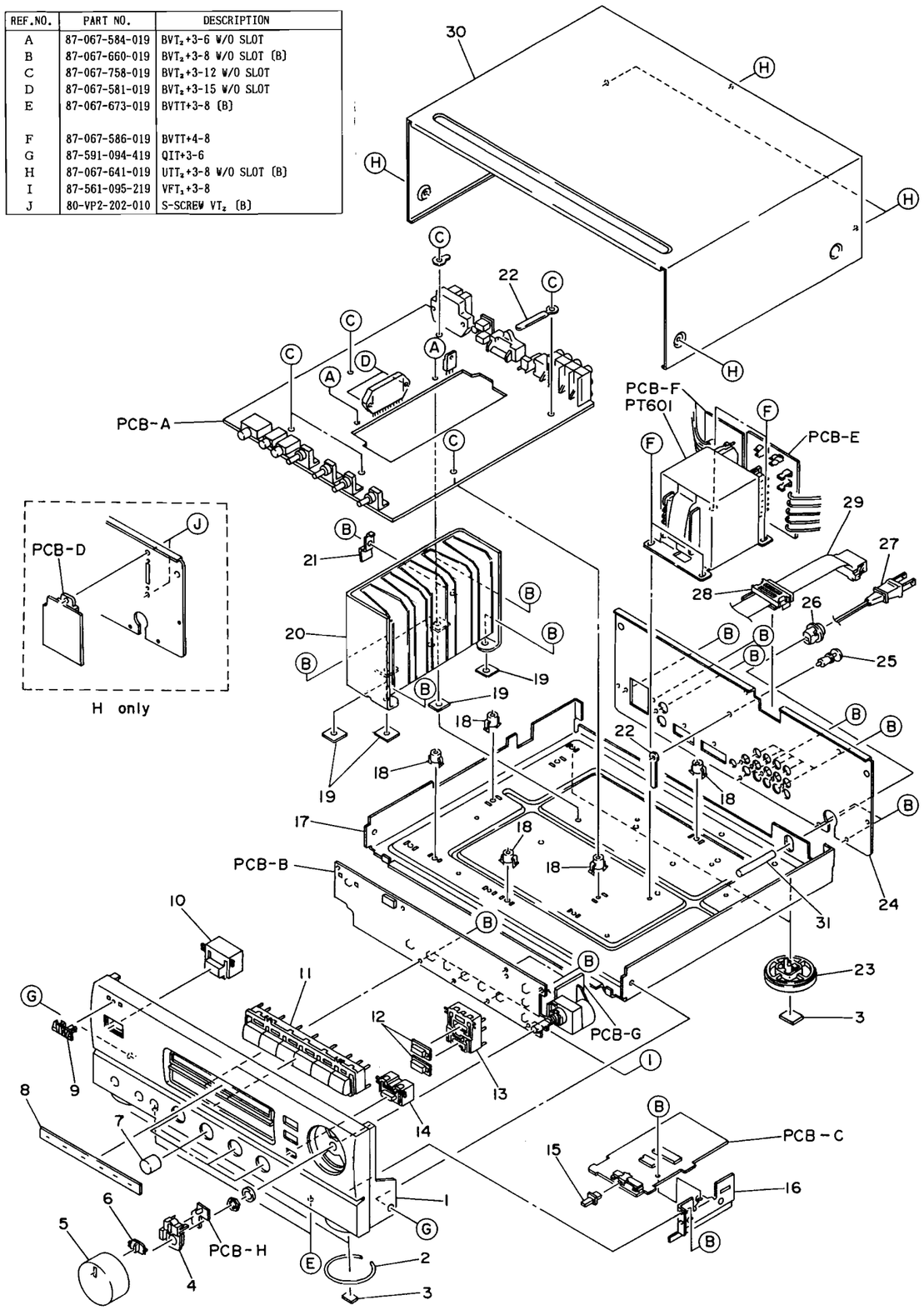

MECHANICAL PARTS LIST (MX – Z92M)

PART NO. CHANGED TO	REF. NO.	PART NO.	DESCRIPTION	COMMON MODEL	Q, TY
	1	★81-VP1-001-019	CABINET, FRONT(H, HE)	*	1
	1	★81-VP1-025-019	CABINET, FRONT(AH)	*	1
	1	★81-VP1-002-019	CABINET, FRONT(E, K, Z)	*	1
	2	★81-VW1-015-010	RING, FOOT		2
	3	★81-VW1-201-019	FELT, 20-15-2		4
	4	★81-MK1-206-019	GUIDE, LED VOLUME		1
	5	★81-MK1-016-019	KNOB, ROTARY VOLUME		1
	6	★81-MK1-033-019	LIGHT, GUIDE VOLUME		1
	7	★81-VP1-005-019	KNOB, BBE	*	4
	8	★81-VP1-013-019	WINDOW, AMP	*	1
	9	★81-MK1-006-019	BADGE, AIWA		1
	10	★81-VX1-006-019	KEY, POWER		1
	11	★81-VP1-007-019	KEY, FUNCTION	*	1
	12	★81-VP1-011-019	LIGHT, BBE	*	2
	13	★81-VP1-010-019	KEY, BBE	*	1
	14	★81-VP1-008-019	KEY, MUTING	*	1
	15	★81-VP1-014-019	KNOB, SLIDE(H, HE)	*	1
	16	---	HOLDER, SLIDE(H, HE)		1
	17	---	CHASSIS, AMP		1
	18	---	HOLDER, PCB 6.0		5
	19	81-VP1-215-019	SHEET, HEAT SINK	*	4
	20	---	HEAT SINK ASSY	*	1
	21	---	HOLDER, IC		1
	22	---	WIRE, BINDER		2
	23	★81-VX1-012-019	FOOT, REAR		2
	24	★81-VP1-020-019	PANEL, REAR(H)	*	1
	24	★81-VP1-023-019	PANEL, REAR(AH)	*	1
	24	★81-VP1-015-019	PANEL, REAR(HE)	*	1
	24	★81-VP1-017-019	PANEL, REAR(E)	*	1
	24	★81-VP1-018-019	PANEL, REAR(K)	*	1
	24	★81-VP1-019-119	PANEL, REAR(Z)	*	1
	25	★87-084-077-019	RIVET, NYLON 3.5-4.5		1
	26	★87-085-184-010	BUSHING, AC CORD(H, AH)		1
	26	★87-085-185-010	BUSHING, AC CORD(HE, E, K, Z)		1
	27	87-034-590-010	AC CORD(H, AH)		1
	27	87-034-591-010	CORD, AC(HE)		1
	27	87-034-781-010	CORD, AC(E, Z)		1
	27	87-034-592-010	CORD, AC(K)		1
	28	★89-VT5-202-010	CORD, BUSHING		1
	29	★81-VP1-621-010	CORD, FG 11P	*	1
	30	★81-VP1-004-019	CABINET, STEEL	*	1
	31	87-830-814-019	TUBE UL8φ-140		1

MODEL NO.

FX – WZ92

CAUTIONS WHEN SERVICING (FX – WZ92)

Model FX – WZ92 does not have a power supply circuit.
Power is supplied to it through a 15 – pin flat cable and the signal inputs/outputs are also performed through this cable.
When servicing the FX – WZ92 connect it to the MX – Z92M so power is supplied to the FX – WZ92.
If the MX – Z92M is not available, follow the procedure below.

[When servicing the unassembled FX – WZ92]

① Supply the following voltages to each terminal from an external power supply.

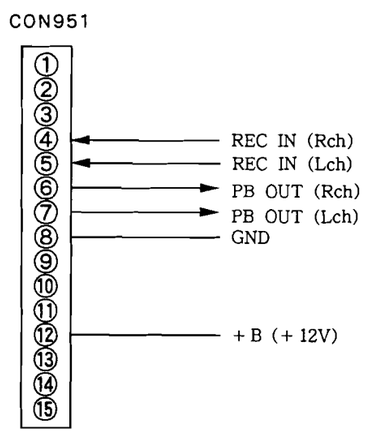

② Connection diagram when using multi power supply (LPS – 9088)

• Connect a multi – conversion harness for the F550 type to J1.

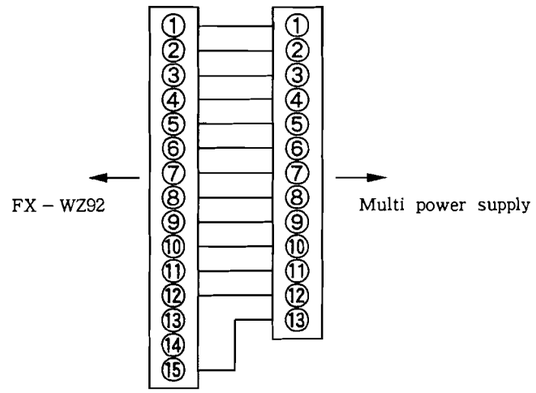

Connect a multi – conversion harness

• After connecting the multi – conversion harness, short the anode of diode D809 to ground and then turn the multi power supply on.

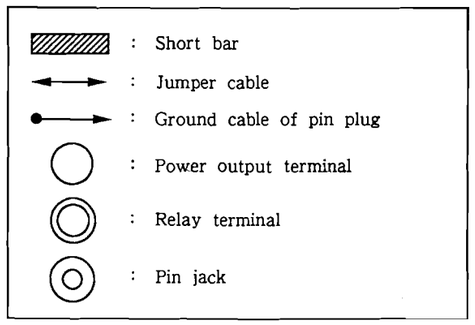

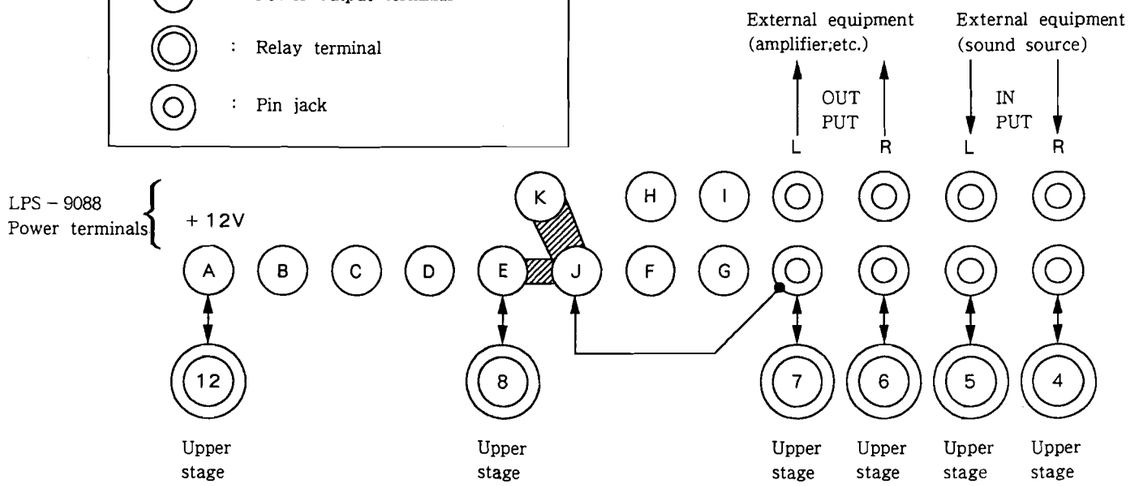

ELECTRICAL MAIN PARTS LIST (FX – WZ92)

REF. NO.	PART NO.	DESCRIPTION
=== IC ===		
	87-001-440-010	IC, BA15218N
	87-002-247-010	IC, BU4052B
	87-002-282-010	IC, BU4066B
	87-001-874-010	IC, HA12134A
	87-001-334-010	IC, LB9051A
	80-MV3-617-010	IC, LC6568H-4591
	87-020-758-010	IC, NJM2068SD
	87-027-827-010	IC, TC4069UBP
=== TRANSISTOR ===		
	89-503-735-010	FET, 2SK373GR
	87-026-463-010	TRANSISTOR, 2SA933S, SR
	89-109-521-010	TRANSISTOR, 2SA952K
	89-112-965-010	TRANSISTOR, 2SA1296GR
	87-026-462-010	TRANSISTOR, 2SC1740S(RS)
	89-318-155-010	TRANSISTOR, 2SC1815GR
	89-320-011-010	TRANSISTOR, 2SC2001K
	89-406-555-010	TRANSISTOR, 2SD655E
	87-026-483-010	TRANSISTOR, DTA123JS
	87-026-218-010	TRANSISTOR, DTC144ES
=== DIODE ===		
	87-001-559-010	DIODE, 1SS131
	87-020-465-010	DIODE, 1SS133
	87-020-123-080	DIODE, DS446
	87-027-475-010	DIODE, ZENER HZ6B1
	87-027-332-010	DIODE, ZENER HZ6B1L
	87-001-913-010	DIODE, ZENER UTZJ5.6B
=== MAIN CIRCUIT BOARD SECTION ===		
C101	★87-018-123-010	CAP, CERA-SOL SS 220P-50 B
C102	★87-018-123-010	CAP, CERA-SOL SS 220P-50 B
C103	★87-018-115-010	CAP, CERA-SOL SS 47P-50 SL
C104	★87-018-115-010	CAP, CERA-SOL SS 47P-50 SL
C109	★87-018-121-010	CAP, CERA-SOL SS 150P-50 B
C110	★87-018-121-010	CAP, CERA-SOL SS 150P-50 B
C111	★87-010-404-010	CAP, ELECT 4.7-50 SME
C112	★87-010-404-010	CAP, ELECT 4.7-50 SME
C113	★87-010-404-010	CAP, ELECT 4.7-50 SME
C114	★87-010-404-010	CAP, ELECT 4.7-50 SME
C115	★87-010-101-010	CAP, ELECT 220-16 SME
C201	★87-018-125-010	CAP, CERA-SOL SS 330P-50 B
C202	★87-018-125-010	CAP, CERA-SOL SS 330P-50 B
C203	★87-018-115-010	CAP, CERA-SOL SS 47P-50 SL
C204	★87-018-115-010	CAP, CERA-SOL SS 47P-50 SL
C207	★87-018-123-010	CAP, CERA-SOL SS 220P-50 B
C208	★87-018-123-010	CAP, CERA-SOL SS 220P-50 B
C211	★87-010-404-010	CAP, ELECT 4.7-50 SME
C212	★87-010-404-010	CAP, ELECT 4.7-50 SME
C213	★87-010-101-010	CAP, ELECT 220-16 SME
C251	★87-018-133-010	CAP, CERA-SOL SS 4700P-16 X
C252	★87-018-100-010	CAP, CERA-SOL SS 4.7P-50 SL
C253	★87-018-132-010	CAP, CERA-SOL SS 2200P-16 X
C255	★87-018-121-010	CAP, CERA-SOL SS 150P-50 B
C256	★87-010-374-010	CAP, ELECT 47-10
C257	★87-010-401-010	CAP, ELECT 1-50 SME
C258	★87-018-100-010	CAP, CERA-SOL SS 4.7P-50 SL
C259	★87-018-131-010	CAP, CERA-SOL SS 1000P-50 B
C301	★87-018-119-010	CAP, CERA-SOL SS 100P-50 B
C302	★87-018-119-010	CAP, CERA-SOL SS 100P-50 B
C303	★87-018-198-010	CAP, CERA-SOL SS 2700P-16 X
C304	★87-018-198-010	CAP, CERA-SOL SS 2700P-16 X
C305	★87-010-404-010	CAP, ELECT 4.7-50 SME
C306	★87-010-404-010	CAP, ELECT 4.7-50 SME
C323	★87-018-128-010	CAP, CERA-SOL SS 560P-50 B
C324	★87-018-128-010	CAP, CERA-SOL SS 560P-50 B
C401	★87-018-123-010	CAP, CERA-SOL SS 220P-50 B
C402	★87-018-123-010	CAP, CERA-SOL SS 220P-50 B
C403	★87-014-068-010	CAP, PP 3000P
C409	★87-010-402-010	CAP, ELECT 2.2-50 SME
C410	★87-010-381-010	CAP, ELECT 330-16 SME
C411	★87-010-221-010	CAP, ELECT 470-10
C451	★87-018-131-010	CAP, CERA-SOL SS 1000P-50 B
C453	★87-018-119-010	CAP, CERA-SOL SS 100P-50 B
C454	★87-018-119-010	CAP, CERA-SOL SS 100P-50 B
C501	★87-018-130-010	CAP, CERA-SOL SS 820P-50 B
C502	★87-018-130-010	CAP, CERA-SOL SS 820P-50 B
C503	★87-018-132-010	CAP, CERA-SOL SS 2200P-16 X
C504	★87-018-132-010	CAP, CERA-SOL SS 2200P-16 X
C505	★87-010-404-010	CAP, ELECT 4.7-50 SME
C506	★87-010-404-010	CAP, ELECT 4.7-50 SME
C511	★87-010-545-010	CAP, ELECT 0.22-50 SME
C512	★87-010-545-010	CAP, ELECT 0.22-50 SME
C514	★87-010-404-010	CAP, ELECT 4.7-50 SME
C515	★87-010-404-010	CAP, ELECT 4.7-50 SME
C517	★87-010-371-010	CAP, ELECT 470-6.3
C519	★87-015-688-010	CAP, ELECT 4.7-35 7L
C520	★87-015-688-010	CAP, ELECT 4.7-35 7L
C601	★87-010-404-010	CAP, ELECT 4.7-50 SME
C602	★87-010-381-010	CAP, ELECT 330-16 SME
C603	★87-010-101-010	CAP, ELECT 220-16 SME
C604	★87-010-237-010	CAP, ELECT 1000-16
C801	★87-010-371-010	CAP, ELECT 470-6.3
C851	★87-010-404-010	CAP, ELECT 4.7-50 SME
C951	★87-018-127-010	CAP, CERA-SOL SS 470P-50 B
C952	★87-018-133-010	CAP, CERA-SOL SS 4700P-16 X
CF801	★89-MX1-704-010	CERALOCK (MU) 3.9MHZ
CON951	★87-064-142-010	CORD, FG15P R(TUNER)
⚠FR701	87-029-019-010	RES, FUSIBLE 2.2-1/2W
L301	★87-005-525-010	COIL, 22MMH-J
L302	★87-005-525-010	COIL, 22MMH-J
L303	★87-003-131-010	COIL, 10MMH J
L304	★87-003-131-010	COIL, 10MMH J
L305	★87-003-123-010	COIL, 2.2MMH J
L306	★87-003-123-010	COIL, 2.2MMH J
L401	★80-VW1-605-010	COIL, OSC BIAS 108K
L601	★87-003-060-010	COIL, 12UH
R405	★87-025-471-010	RES, NF 4.7-1/4W J
SFR101	★87-024-349-010	SFR, 1K DIA6 H
SFR102	★87-024-349-010	SFR, 1K DIA6 H
SFR201	★87-024-349-010	SFR, 1K DIA6 H
SFR202	★87-024-349-010	SFR, 1K DIA6 H
SFR301	★87-024-353-010	SFR, 10K DIA6 H
SFR302	★87-024-353-010	SFR, 10K DIA6 H
SFR401	★87-024-356-010	SFR, 47K DIA6 H
SFR402	★87-024-356-010	SFR, 47K DIA6 H
=== FRONT CIRCUIT BOARD SECTION ===		
LED922	87-001-124-010	LED, SLZ381C(REV PLAY) (DECK2)
LED923	87-001-124-010	LED, SLZ381C(FWD PLAY) (DECK2)
LED924	87-001-294-010	LED, SLZ481C(PAUSE) (DECK2)
LED925	87-001-123-010	LED, SLZ981C(REC) (DECK2)
LED926	87-001-124-010	LED, SLZ381C(FWD PLAY) (DECK1)
LED927	87-001-124-010	LED, SLZ381C(REV PLAY) (DECK1)
LED928	87-001-124-010	LED, SLZ381C(DOLBY)
LED930	87-001-124-010	LED, SLZ381C(REV MODE ⮌)

REF. NO.	PART NO.	DESCRIPTION
LED931	87-001-124-010	LED, SLZ381C (REV MODE ⇄)
LED932	87-001-123-010	LED, SLZ981C (DUBB)
LED933	87-001-123-010	LED, SLZ981C (CD REC)
S901	87-036-142-010	TACT SW (STOP) (DECK2)
S902	87-036-142-010	TACT SW (RWD) (DECK2)
S903	87-036-142-010	TACT SW (PLAY) (DECK2)
S904	87-036-142-010	TACT SW (FF) (DECK2)
S905	87-036-142-010	TACT SW (STOP) (DECK1)
S906	87-036-142-010	TACT SW (RWD) (DECK1)
S907	87-036-142-010	TACT SW (PLAY) (DECK1)
S908	87-036-142-010	TACT SW (CD N. REC)
S909	87-036-142-010	TACT SW (CD H. REC) (EXCEPT K)
S910	87-036-142-010	TACT SW (PAUSE) (DECK2)
S911	87-036-142-010	TACT SW (REC) (DECK2)
S912	87-036-142-010	TACT SW (N. DUBB)
S913	87-036-142-010	TACT SW (H. DUBB)
S914	87-036-142-010	TACT SW (FF) (DECK1)
S918	87-036-142-010	TACT SW (REV MODE)
S921	87-036-142-010	TACT SW (DOLBY)
::: DECK-1 CIRCUIT BOARD SECTION :::		
M1	87-045-320-010	MOTOR SHW2L
SFR1	★87-024-331-010	SFR, 5K
SFR2	★87-024-331-010	SFR, 5K
SOL1	★86-575-622-010	SOLENOID (FR)
SOL2	★86-575-622-010	SOLENOID (PLAY)
SW1	87-036-110-010	PUSH SW (CR02)
SW2	87-036-110-010	PUSH SW (CST)
SW3	86-575-632-010	LEAF SW (FR)
SW4	87-036-110-010	PUSH SW (PLAY)
::: DECK-2 CIRCUIT BOARD SECTION :::		
M11	87-045-320-010	MOTOR SHW2L
SFR11	★87-024-331-010	SFR, 5K
SFR12	★87-024-331-010	SFR, 5K
SOL11	★86-575-622-010	SOLENOID (FR)
SOL12	★86-575-622-010	SOLENOID (PLAY)
SW11	87-036-110-010	PUSH SW (MT)
SW12	87-036-110-010	PUSH SW (REB)
SW13	87-036-109-010	PUSH SW (REA)
SW14	87-036-110-010	PUSH SW (CR02)
SW15	87-036-110-010	PUSH SW (CST)
SW16	86-575-632-010	LEAF SW (FR)
SW17	87-036-110-010	PUSH SW (PLAY)
::: RELAY-1 CIRCUIT BOARD SECTION :::		
::: RELAY-2 CIRCUIT BOARD SECTION :::		
::: MISCELLANEOUS :::		
PH1	87-046-355-010	P HEAD (DECK1)
RPEH	87-046-356-010	R. P. E HEAD (DECK2)

BLOCK DIAGRAM (FX – WZ92)

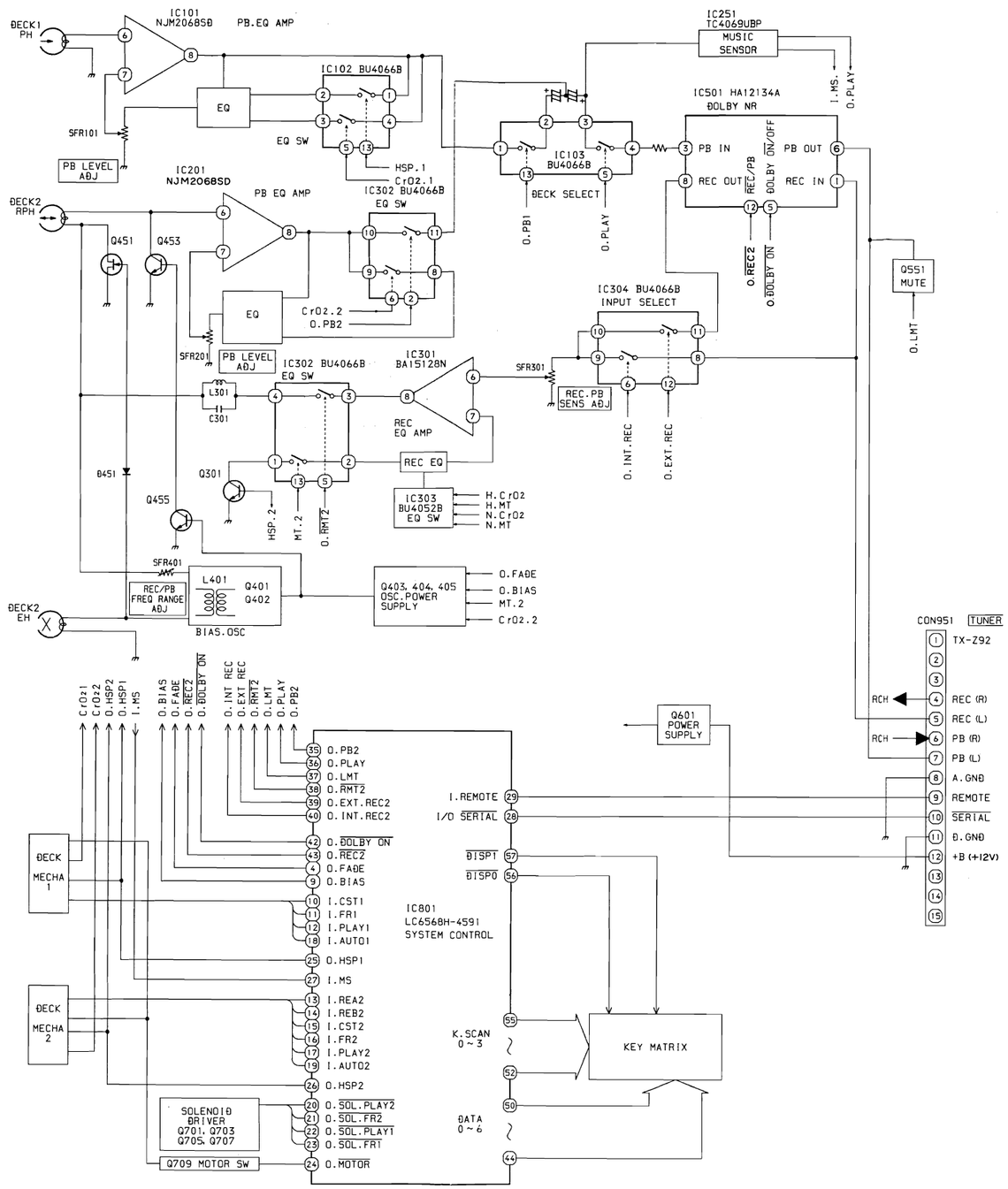

SCHEMATIC DIAGRAM (FX – WZ92)

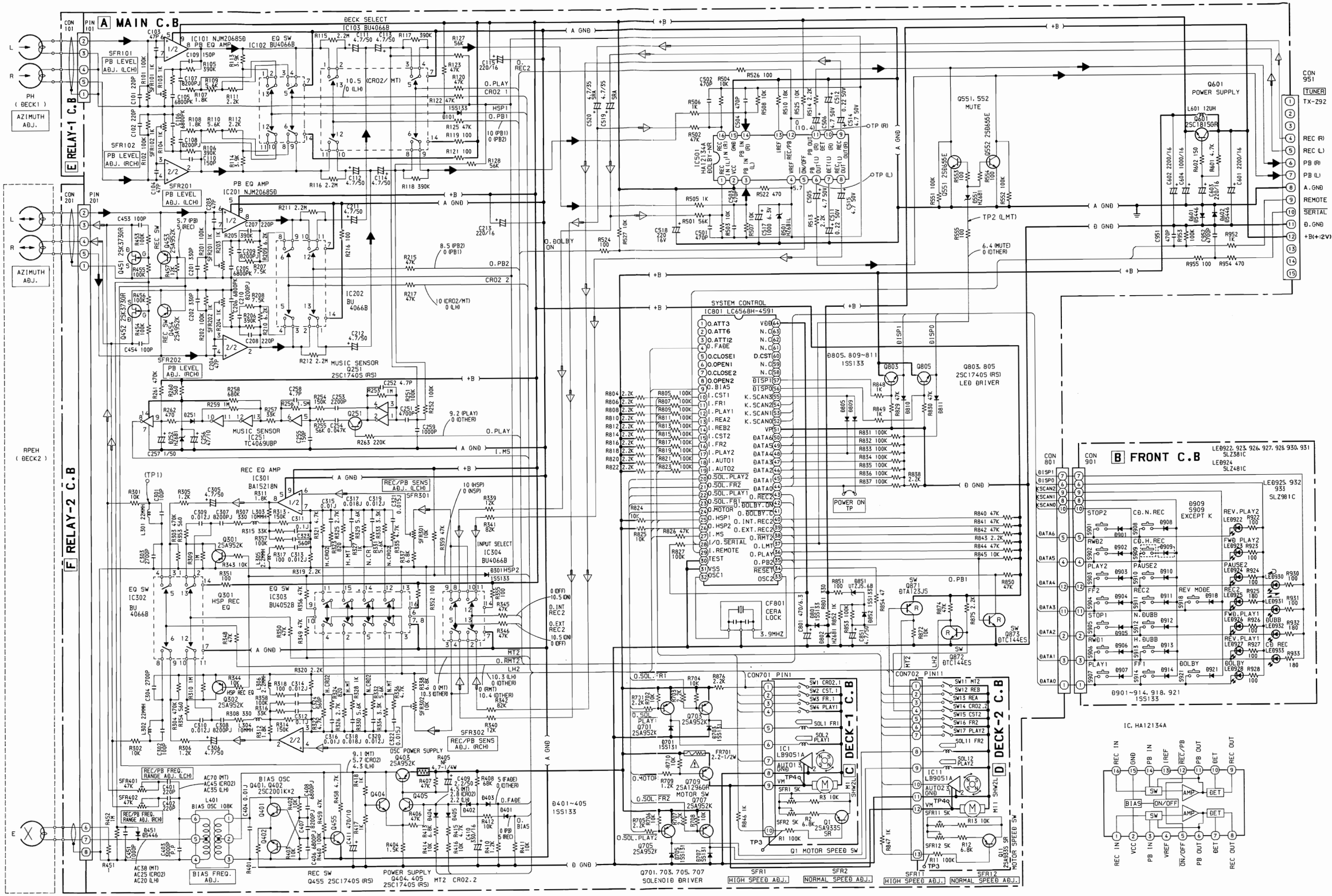

A MAIN C.B

C DECK-1 C.B

D DECK-2 C.B

F RELAY-2 C.B

E RELAY-1 C.B

To TUNER CON451

To B FRONT C.B CON401

To A MAIN C.B PIN201

To A MAIN C.B PIN101

To D DECK-2 C.B PIN11

To C DECK-1 C.B PIN1

SFR301 REC/PB SENS. ADJ. (Lch)

SFR302 REC/PB SENS. ADJ. (Rch)

SFR401 REC/PB FREQ. RANGE ADJ. (Lch)

SFR402 REC/PB FREQ. RANGE ADJ. (Rch)

SFR201 PB LEVEL ADJ. (Lch) (DECK 2)

SFR202 PB LEVEL ADJ. (Rch) (DECK 2)

SFR102 PB LEVEL ADJ. (Rch) (DECK 1)

SFR101 PB LEVEL ADJ. (Lch) (DECK 1)

SFR1,11 HIGH SPEED ADJ.

SFR2(D1) SFR12(D2) NORMAL SPEED ADJ.

SW1(D1) SW14(D2) CrO2

SW2(D1) SW15(D2) CST

SW11(D2) MT

SW13(D2) REA

SW12(D2) REB

SW3(D1) SW16(D2) FR

SW4(D1) SW17(D2) PLAY

SOL1(D1) SOL11(D2) FR

SOL2(D1) SOL12(D2) PLAY

MOTOR

M1 (DECK 1) M11 DECK 2)

PREH

PH

To PIN201 8 7 5 3 1 FROM F RELAY-2 C.B CON201

To PIN101 5 3 1 FROM E RELAY-1 C.B CON101

MECHA EARTH (DECK2)

MECHA EARTH (DECK1)

80-HV3-601-210

GRAPHIC SYMBOLS PRINTED CIRCUIT BOARD OF ELECT. CAP. ARE DESIGNED AS NEGATIVE POLE.

(プリント基板内のケミコンの極性表示は⊖表示です。)

DECK 2

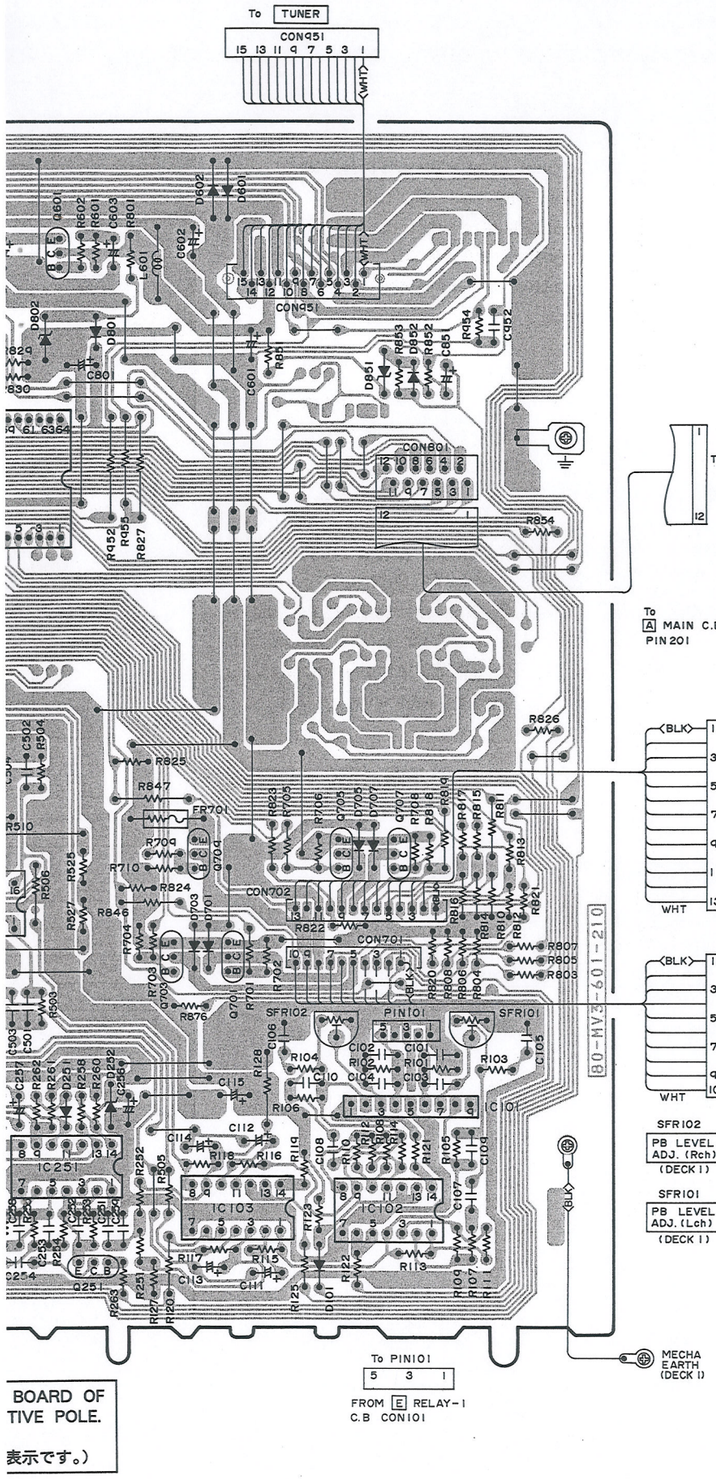

C DECK-1 C.B

D DECK-2 C.B

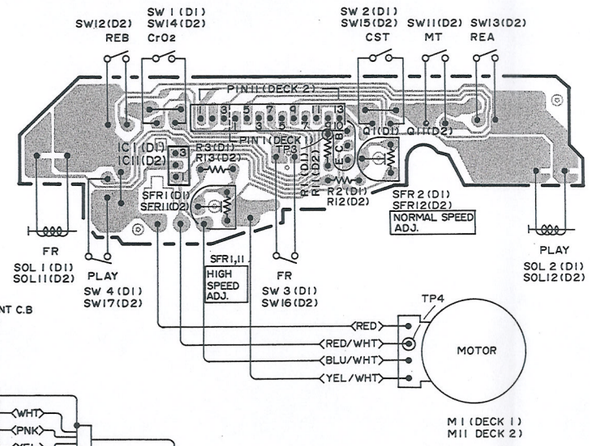

F RELAY-2 C.B

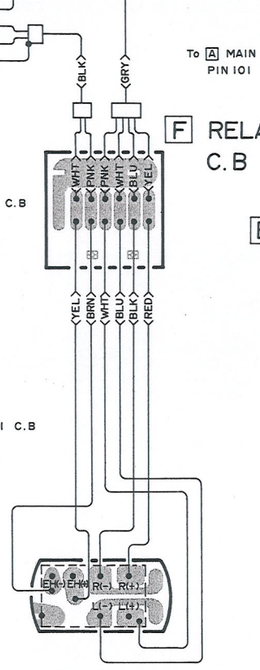

E RELAY-1 C.B

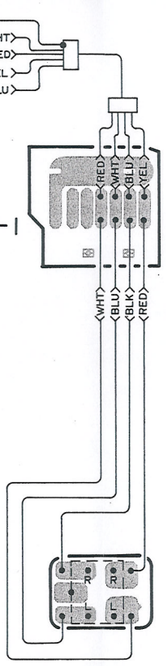

B FRONT C.B

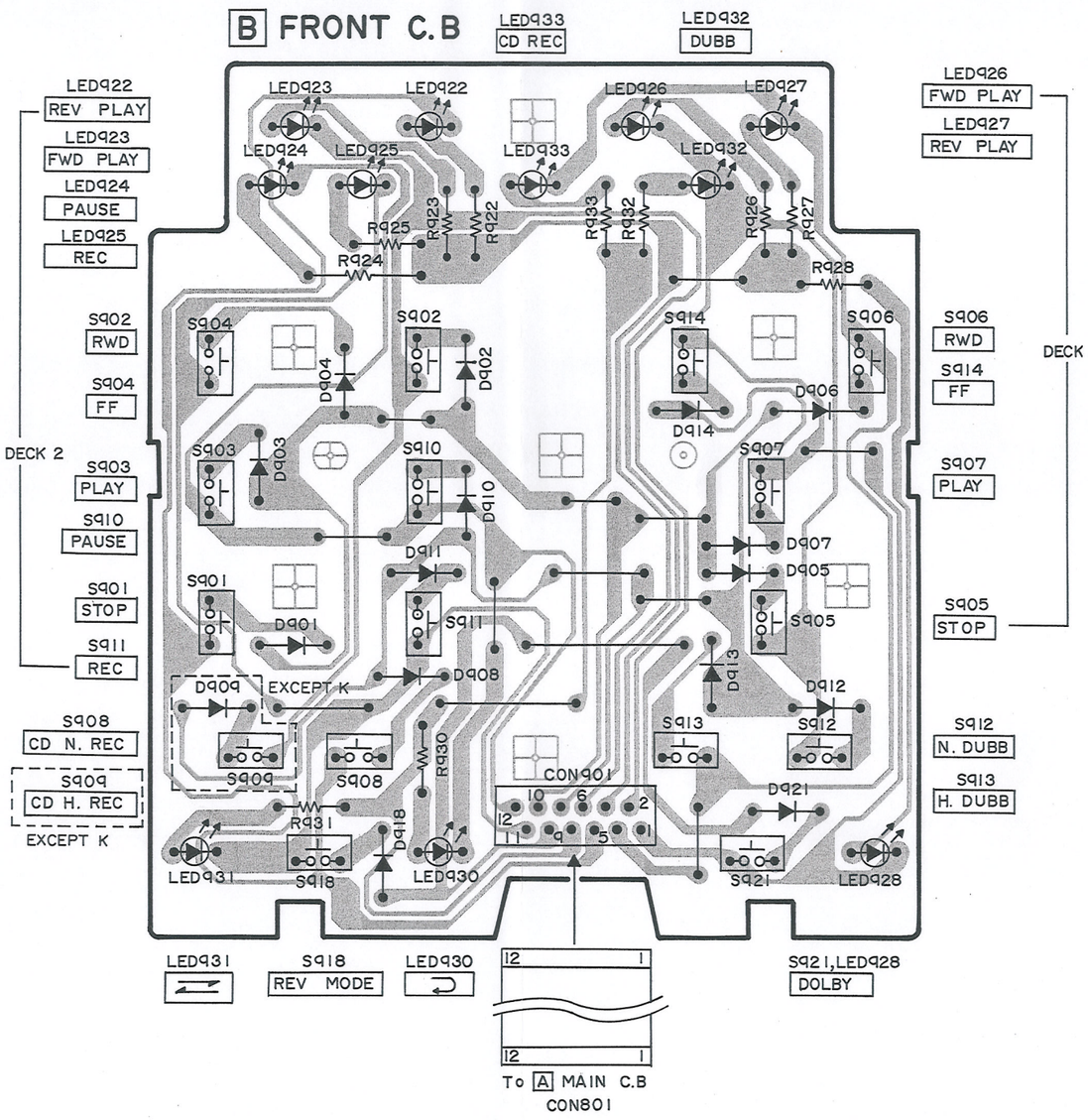

BOARD OF
TIVE POLE.

表示です。)

A MAIN C.B

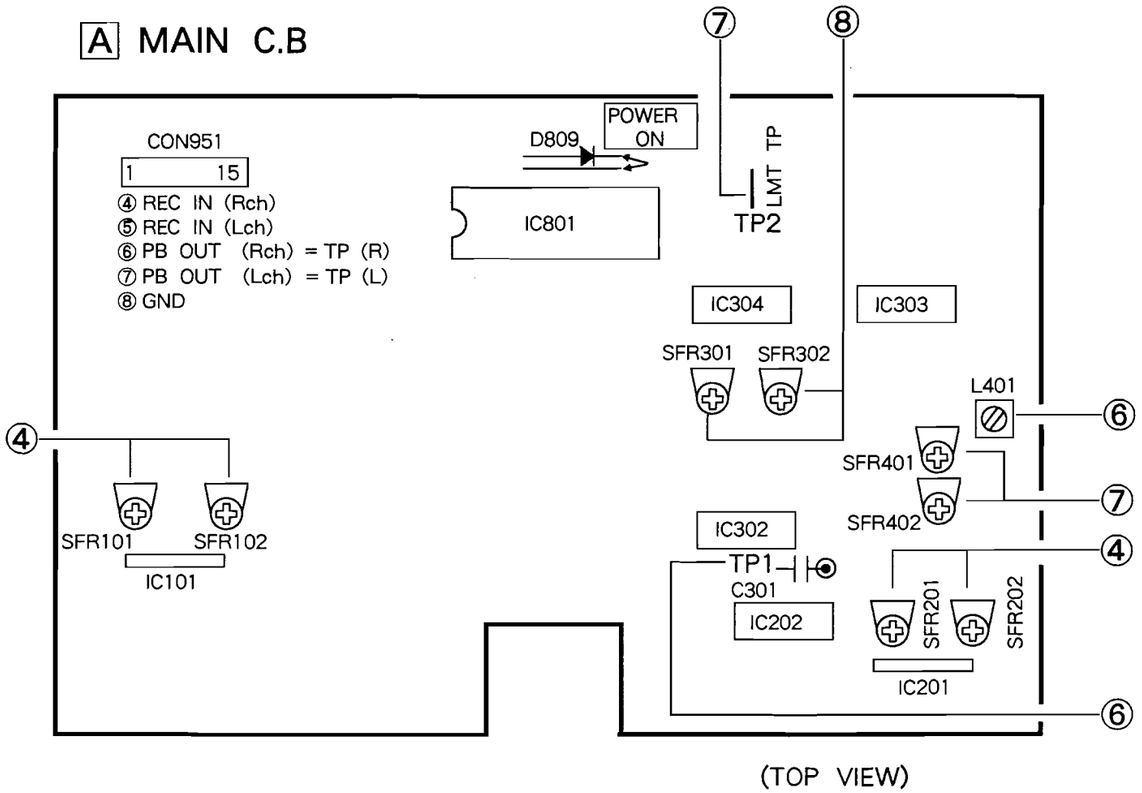

(TOP VIEW)

C DECK – 1 C.B
D DECK – 2 C.B

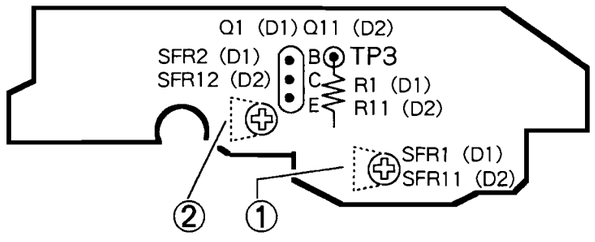

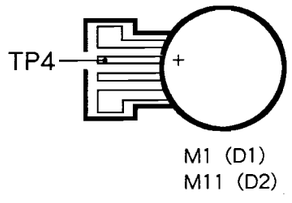

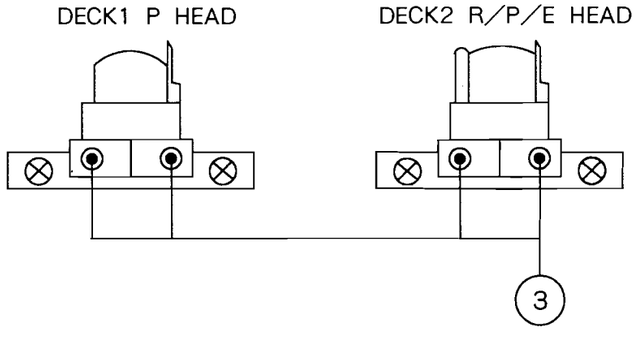

1. High Speed Adjustment (DECK1, DECK2)
   Settings : • Test tape : TTA – 100 (TTA – 111S)
   • Test point : PB – OUT (CON951)
   • Adjustment Location : SFR1 (DECK1)
   SFR11 (DECK2)
   Method : Play back the test tape, and make the high speed condition to be shorted between TP3 and TP4. Adjust for 6000Hz.

2. Normal Speed Adjustment (DECK1, DECK2)
   Settings : • Test tape : TTA – 100 (TTA – 111S)
   • Test point : PB – OUT (CON951)
   • Adjustment Location : SFR2 (DECK1)
   SFR12 (DECK2)
   Method : Play back the test tape, adjust for 3000Hz.

3. Head Azimuth Adjustment (DECK1, DECK2)
   Settings : • Test tape : TTA – 310
   (TTA – 317E, SCC – 1429)
   • Test point : PB – OUT (CON951)
   • Adjustment Location : Head azimuth adjustment screw
   Method : Play back the 10kHz signal of the test tape and adjust so that the output becomes maximum.
   Next, perform on each FWD PLAY and REV PLAY mode.

4. PB Level Adjustment (DECK1, DECK2)
   Settings : • Test tape : TTA – 200 (TTA – 161, TCC – 130)
   • Test point : PB – OUT (CON951)
   • Adjustment Location : SFR101 (DECK1, Lch)
   SFR102 (DECK1, Rch)
   SFR201 (DECK2, Lch)
   SFR202 (DECK2, Rch)
   Method : Play back the test tape and adjust so that the output becomes 295mV ± 30mV.

5. PB Frequency Response Check (DECK1, DECK2)
   Settings : • Test tape : TTA – 310
   (TTA – 317E, SCC – 1429)
   • Test point : PB – OUT (CON951)
   Method : Play the 315Hz and 10kHz signals of the test tape and check the output of the 10kHz signal is 0dB ± 2.5dB with respect to that of the 315Hz signal.

6. Bias Frequency Adjustment (DECK2)
   Settings : • Test tape : TTA – 601 (TTA – 119K)
   • Test point : TP1
   • Adjustment Location : L401
   Method : Set DECK2 to the record mode and adjust L401 so that the frequency at TP1 is 108kHz ± 2kHz.

7. REC/PB Frequency Response Adjustment (DECK2)
   Settings : • Test tape : TTA – 601 (TTA – 119K)
   • Test point : PB – OUT (CON951)
   • Adjustment Location : SFR401 (Lch)
   SFR402 (Rch)
   Method : Connect TP2 (LMT TP) to ground (chassis), apply a 1kHz signal and adjust attenuator so that the level at the PB OUT is 21mV. Record and play back the 1kHz and 10kHz signals and adjust so that the output level of 10kHz signal is 0dB ± 0.5dB for 1kHz signal. After adjustment, remove the grounding lead wire.

8. REC/PB Sensitivity Adjustment (DECK2)
   Settings : • Test tape : TTA – 601 (TTA – 119K)
   • Test point : PB – OUT (CON951)
   • Adjustment Location : SFR301 (Lch)
   SFR302 (Rch)
   Method : Connect TP2 (LMT TP) to ground (chassis), apply a 1kHz signal and adjust attenuator so that the level at the PB OUT is 21mV. Record and play back the 1kHz signal and adjust SFR301 and SFR302 so that the output level of is 21mV ± 0.3dB. After adjustment, remove the grounding lead wire.

PRACTICAL SERVICE FIGURE (FX – WZ92)

PB output level :	295mV ± 1dB (PB – OUT) TTA – 200 (TTA – 161, TCC – 130)
REC/PB output level :	210mV ± 1dB(PB – OUT, 1kHz)
Distortion (REC/PB) :	Less than 2.0 % (NORM., CrO2)
Erasing ratio :	More than 60dB
Crosstalk :	More than 60dB
Channel separation :	More than 30dB
Noise (REC/PB) :	Less than 2.2mV (DOLBY OFF NORM.) Less than 1.1mV/1.0mV (DOLBY ON CrO2,MT)
Noise (PB) :	Less than 2.0mV (DOLBY OFF NORM.) Less than 1.0mV (DOLBY ON CrO2)
Recording bias frequency :	108kHz
Tape speed :	3000Hz ± 1.5 %
Wow & flutter (W.RMS) :	Less than 0.18 % (DECK1, 2)
Take – up torque :	25~60g-cm (DECK1, 2)
F.F & REW torque :	70~150g-cm (DECK1, 2)
Back tension :	2~6g-cm (DECK1, 2)
Test tape :	NORMAL : TTA – 601 (TTA – 119K) CrO2 : TTA – 610 (TTA – 119H)

IC DESCI

IC,LC656

Pin No
1
2
3
4
5
6
7
8
9
10
11
12
13
14
15
16
17
18
19
20
21
22
23
24
25
26
27
28
29
30
31
32
33
34
35
36
37
38
39
40
41
42
43

1. High Speed Adjustment (DECK1, DECK2)
   Settings : • Test tape : TTA – 100 (TTA – 111S)
   • Test point : PB – OUT (CON951)
   • Adjustment Location : SFR1 (DECK1)
   SFR11 (DECK2)
   Method : Play back the test tape, and make the high speed condition to be shorted between TP3 and TP4. Adjust for 6000Hz.

2. Normal Speed Adjustment (DECK1, DECK2)
   Settings : • Test tape : TTA – 100 (TTA – 111S)
   • Test point : PB – OUT (CON951)
   • Adjustment Location : SFR2 (DECK1)
   SFR12 (DECK2)
   Method : Play back the test tape, adjust for 3000Hz.

3. Head Azimuth Adjustment (DECK1, DECK2)
   Settings : • Test tape : TTA – 310
   (TTA – 317E, SCC – 1429)
   • Test point : PB – OUT (CON951)
   • Adjustment Location : Head azimuth adjustment screw
   Method : Play back the 10kHz signal of the test tape and adjust so that the output becomes maximum.
   Next, perform on each FWD PLAY and REV PLAY mode.

4. PB Level Adjustment (DECK1, DECK2)
   Settings : • Test tape : TTA – 200 (TTA – 161, TCC – 130)
   • Test point : PB – OUT (CON951)
   • Adjustment Location : SFR101 (DECK1, Lch)
   SFR102 (DECK1, Rch)
   SFR201 (DECK2, Lch)
   SFR202 (DECK2, Rch)
   Method : Play back the test tape and adjust so that the output becomes 295mV ± 30mV.

5. PB Frequency Response Check (DECK1, DECK2)
   Settings : • Test tape : TTA – 310
   (TTA – 317E, SCC – 1429)
   • Test point : PB – OUT (CON951)
   Method : Play the 315Hz and 10kHz signals of the test tape and check the output of the 10kHz signal is 0dB ± 2.5dB with respect to that of the 315Hz signal.

6. Bias Frequency Adjustment (DECK2)
   Settings : • Test tape : TTA – 601 (TTA – 119K)
   • Test point : TP1
   • Adjustment Location : L401
   Method : Set DECK2 to the record mode and adjust L401 so that the frequency at TP1 is 108kHz ± 2kHz.

7. REC/PB Frequency Response Adjustment (DECK2)
   Settings : • Test tape : TTA – 601 (TTA – 119K)
   • Test point : PB – OUT (CON951)
   • Adjustment Location : SFR401 (Lch)
   SFR402 (Rch)
   Method : Connect TP2 (LMT TP) to ground (chassis), apply a 1kHz signal and adjust attenuator so that the level at the PB OUT is 21mV. Record and play back the 1kHz and 10kHz signals and adjust so that the output level of 10kHz signal is 0dB ± 0.5dB for 1kHz signal. After adjustment, remove the grounding lead wire.

8. REC/PB Sensitivity Adjustment (DECK2)
   Settings : • Test tape : TTA – 601 (TTA – 119K)
   • Test point : PB – OUT (CON951)
   • Adjustment Location : SFR301 (Lch)
   SFR302 (Rch)
   Method : Connect TP2 (LMT TP) to ground (chassis), apply a 1kHz signal and adjust attenuator so that the level at the PB OUT is 21mV. Record and play back the 1kHz signal and adjust SFR301 and SFR302 so that the output level of is 21mV ± 0.3dB. After adjustment, remove the grounding lead wire.

PRACTICAL SERVICE FIGURE (FX – WZ92)

PB output level :	295mV ± 1dB (PB – OUT) TTA – 200 (TTA – 161, TCC – 130)
REC/PB output level :	210mV ± 1dB (PB – OUT, 1kHz)
Distortion (REC/PB) :	Less than 2.0% (NORM., CrO2)
Erasing ratio :	More than 60dB
Crosstalk :	More than 60dB
Channel separation :	More than 30dB
Noise (REC/PB) :	Less than 2.2mV (DOLBY OFF NORM.) Less than 1.1mV/1.0mV (DOLBY ON CrO2.MT)
Noise (PB) :	Less than 2.0mV (DOLBY OFF NORM.) Less than 1.0mV (DOLBY ON CrO2)
Recording bias frequency :	108kHz
Tape speed :	3000Hz ± 1.5%
Wow & flutter (W.RMS) :	Less than 0.18% (DECK1, 2)
Take – up torque :	25~60g-cm (DECK1, 2)
F.F & REW torque :	70~150g-cm (DECK1, 2)
Back tension :	2~6g-cm (DECK1, 2)
Test tape :	NORMAL : TTA – 601 (TTA – 119K) CrO2 : TTA – 610 (TTA – 119H)

IC DESCRIPTION (FX – WZ92)

IC,LC6568H – 4591

Pin No.	Pin Name	I/O	Description
1	O·ATT3	O	Input signal level control output from the cross fade. Active "H" (Not used)
2	O·ATT6	O	
3	O·ATT12	O	
4	O·FADE	O	DECK 2 Recording bias oscillation output at the CBRS and cross fade. Active "H".
5	O·CLOSE1	O	DECK 1 Cassette box motor drive control output. Active "H" (Not used) ·
6	O·OPEN1	O	
7	O·CLOSE2	O	DECK 2 Cassette box motor drive control output. Active "H" (Not used)
8	O·OPEN2	O	
9	O·BIAS	O	DECK 2 Recording bias oscillation output. Goes "H" in the record and dubbing modes.
10	I·CST1	I	DECK 1 Cassette tape detection switching input. Goes "L" switch on.
11	I·FR1	I	DECK 1 FF and FWD detection switching input. Goes "L" FF or RWD switch on.
12	I·PLAY1	I	DECK 1 PLAY ddetection switching input. Goes "L" PLAY switch on.
13	I·REA2	I	DECK 2 Side A's accidental erasure prevention switch input. Goes "L" when recording is possible.
14	I·REB2	I	DECK 2 Side B's accidental erasure prevention switch input. Goes "L" when recording is possible.
15	I·CST2	I	DECK 2 Cassette tape detection switching input. Goes "L" switch on.
16	I·FR2	I	DECK 2 FF and RWD detection switching input. Goes "L" FF or RWD switch on.
17	I·PLAY2	I	DECK 2 PLAY detection switching input. Goes "L" PLAY switch on.
18	I·AUTO1	I	DECK 1 Reel disk pulse input.
19	I·AUTO2	I	DECK 2 Reel disk pulse input.
20	O·$\overline{\text{SOL·PLAY2}}$	O	DECK 2 PLAY solenoid drive output. Active "L".
21	O·$\overline{\text{SOL·FR2}}$	O	DECK 2 FF and RWD solenoid drive output. Active "L".
22	O·$\overline{\text{SOL·PLAY1}}$	O	DECK 1 PLAY solenoid drive output. Active "L".
23	O·$\overline{\text{SOL·FR1}}$	O	DECK 1 FF and RWD solenoid drive output. Active "L".
24	O·$\overline{\text{MOTOR}}$	O	DECK 1/2 Main motor contorl output. Goes "L" in the STOP mode.
25	O·HSP1	O	DECK 1 High speed control output. Goes "H" in the high speed dubbing mode.
26	O·HSP2	O	DECK 2 High speed control output. Goes "H" in the high speed dubbing mode.(Tape deck and CD)
27	I·MS	I	MS signal input. Active "L".
28	I/O $\overline{\text{SERIAL}}$	I/O	CD and amplifier serial data input and output.
29	I·REMOTE	I	Remote control serial data input.
30	TEST	–	MPU test pin to be connected to VSS.
31	VSS	–	MPU I/O and powe supply common pin.
32	OSC1	–	Pins to generate a 4MHz clock signal.
33	OSC2	–	
34	$\overline{\text{RESET}}$	I	MPU reset input. Goes "L" input resets the MPU.
35	O·PB2	O	DECK 1/2 PB output level control pin. Goes "H" in the DECK 2 PB.
36	O·PLAY	O	CUE/REVIEW muting and MS sensitivity switching output. Goes "H" PB.
37	O·LMT	O	Record and playback muting output. Active "H".
38	O·$\overline{\text{RMT2}}$	O	Record muting output. Goes "H" in the REC mute, rercording I/O aand REC pause.
39	O·EXT·REC2	O	DECK 2 Recording switching output. Goes "H" DECK 1 PB and DECK 2 REC.
40	O·INT·REC2	O	DECK 2 Recording switching output. Goes "H" in the record and dubbing modes. Goes "L" in the O·EXT·REC "H".
41	O·$\overline{\text{DOLBY C}}$	O	Dolby NR B/C switching output. Goes "H" Dolby C. (Not used)
42	O·$\overline{\text{DOLBY ON2}}$	O	Dolby NR ON/OFF switching output. Goes "H" Dolby on.
43	O·$\overline{\text{REC2}}$	O	Dolby encode/decode switching output. Goes "H" REC, "L" dubbing.

Pin No.	Pin Name	I/O	Description				
			KEY DATA IN				
			K SCAN 0 is "H"	K SCAN 1 is "H"	K SCAN 2 is "H"	DISP 0 lights at "H"	DISP 1 lights at "H"
44	DATA 0	I	PLAY 1 KEY ligths	FF 1 KEY ligths	DOLBY KEY IN	DOLBY lights	
45	DATA 1	I	RWD 1 KEY IN	H·DUBB KEY IN		R·PLAY 1 lights	CD REC lights
46	DATA 2	I	STOP 1 KEY IN	N·DUBB KEY IN		F·PLAY 1 lights	SYNC DUBB lights
47	DATA 3	I	FF 2 KEY IN	REC 2 KEY IN	REV MODE KEY IN	REC 2 lights	
48	DATA 4	I	PLAY 2 KEY IN	PAUSE 2 KEY IN		PAUSE 2 lights	
49	DATA 5	I	RWD 2 KEY IN	CD.H.REC KEY IN		F·PLAY 2 lights	
50	DATA 6	I	STOP 2 KEY IN	CD.N.REC KEY IN		R·PLAY 2 lights	
51	VP	–	GND				
52	K·SCAN 0	O	KEY SCAN outputs for DATA 0~DATA6.				
53	K·SCAN 1	O					
54	K·SCAN 2	O					
55	K·SCAN 3	O					
56	$\overline{\text{DISP 0}}$	O	DISP 0 and DISP 1 INDI. output pin.				
57	$\overline{\text{DISP 1}}$	O					
58 59 61 62 63	NC	–	Not used.				
60	D·CST	–	Cassette box LED display drive output. Power ON → "H", Power OFF → "L"				
64	VDD	–	Power Supply pin.(+5V)				

IC BLOCK DIAGRAM (FX – WZ92)

IC,HA12134A

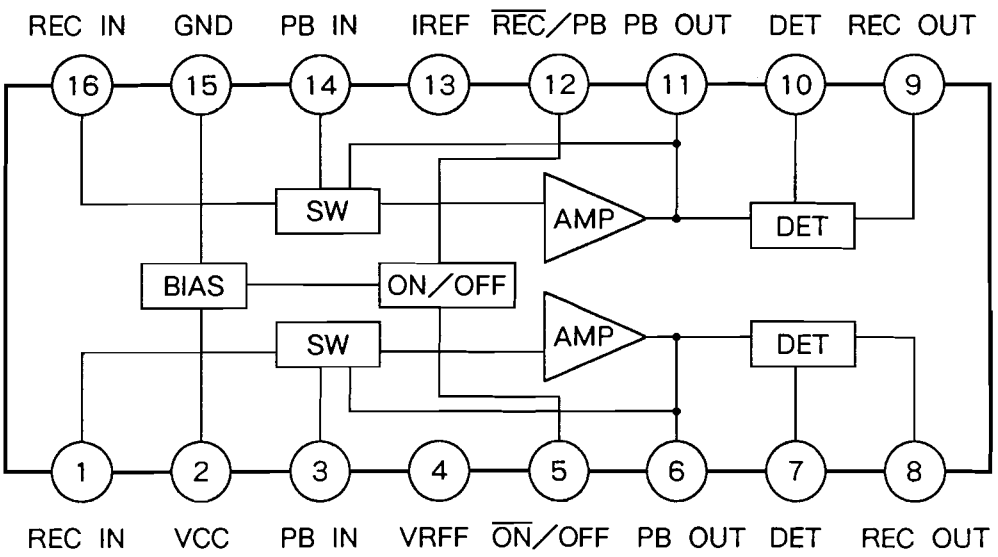

EXPLODED VIEW – 1 (FX – WZ92)

REF.NO.	PART NO.	DESCRIPTION
A	87-067-660-019	BVT$_2$+3-8 (B)
B	87-067-703-019	BVT$_2$+3-10
C	87-067-581-019	BVT$_2$+3-15
D	87-067-632-019	BVT$_2$+3-15 W/CONVEX
E	87-721-095-419	QT$_2$+3-8
F	87-067-641-019	UTT$_2$+3-8(B)
G	87-081-808-019	PW1.7-3.5-0.25

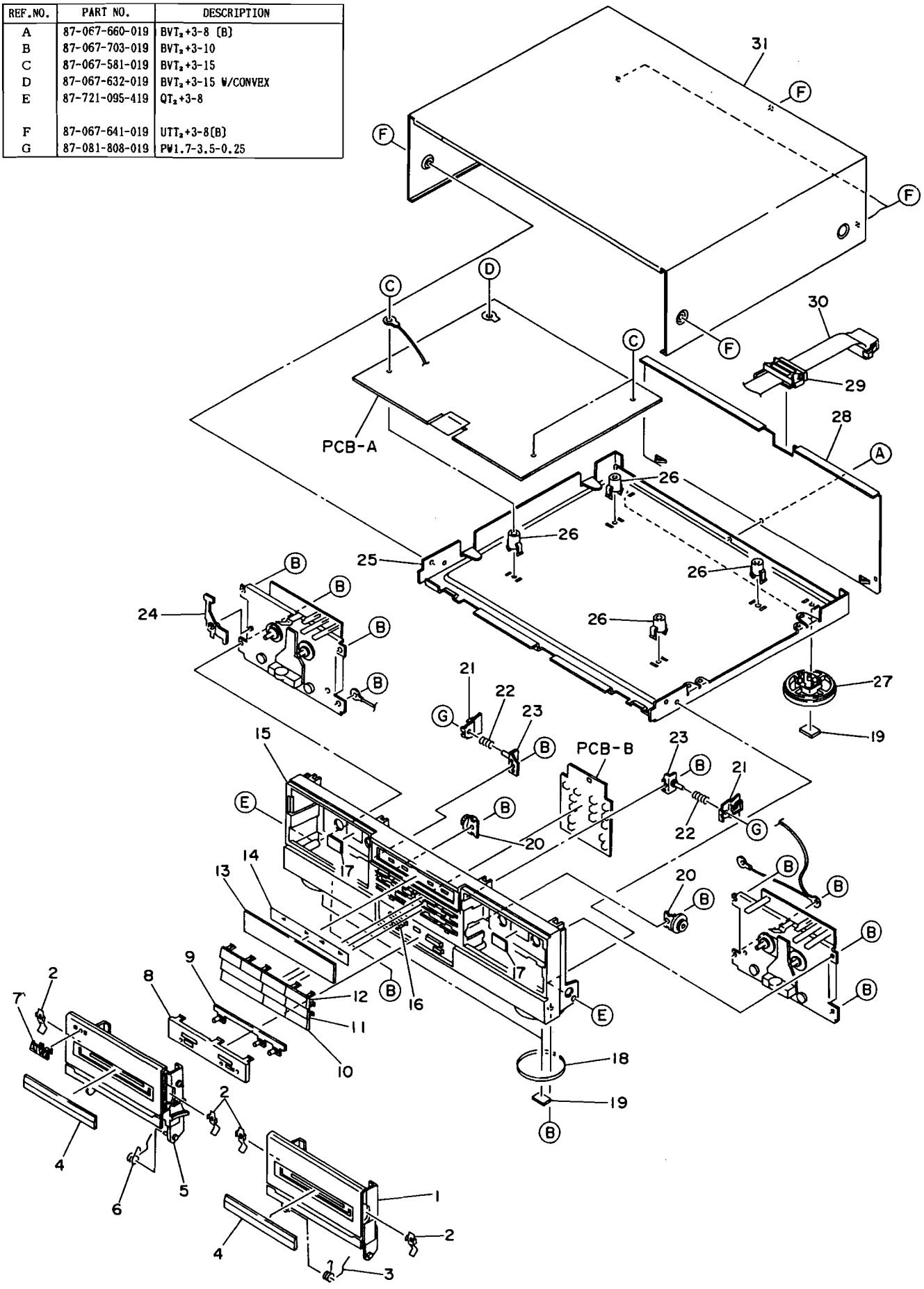

MECHANICAL PARTS LIST (FX – WZ92)

PART NO. CHANGED TO	REF. NO.	PART NO.	DESCRIPTION	COMMON MODEL	Q. TY
	1-1	81-VW1-004-019	BOX, CASSETTE 2	*	1
	1-2	★82-202-217-110	P-SPRING, CASSETTE HOLDER		4
	1-3	★81-MK1-203-019	T-SPRING, EJECT 2		1
	1-4	★81-VW1-010-019	WINDOW, CASSETTE	*	2
	1-5	81-VW1-003-019	BOX, CASSETTE 1	*	1
	1-6	★81-MK1-202-019	T-SPRING, EJECT 1		1
	1-7	★81-MK1-006-019	BADGE, AIWA		1
	1-8	★81-VW1-012-019	DUMMY, DUBBING	*	1
	1-9	★81-VW1-013-019	INDICATOR, DOLBY	*	1
	1-10	★81-VW1-007-019	KEY, REC	*	1
	1-11	★81-VW1-006-019	KEY, PLAY	*	1
	1-12	★81-VW1-005-019	KEY, FF	*	1
	1-13	★81-VW1-011-019	WINDOW, DISPLAY	*	1
	1-14	★81-VW1-014-019	SHEET, LED	*	1
	1-15	★81-VW1-001-019	CABINET, FRONT	*	1
	1-16	★81-VW1-008-019	KEY, DUBBING(EXCEPT YK)	*	1
	1-16	★81-VW1-009-019	KEY, DUBBING(YK)	*	1
	1-17	★81-532-080-019	LABEL, CASSETTE COMPONENT		2
	1-18	★81-VW1-015-010	RING, FOOT	*	2
	1-19	★81-VW1-201-019	FELT, 20-15-2	*	4
	1-20	★87-063-143-010	OIL DAMPER 75		2
	1-21	★80-CD3-233-010	PLATE, LOCK		2
	1-22	★81-715-234-019	C-SPRING, LOCK PLATE		2
	1-23	★81-693-209-010	HOLDER LOCK ASSY		2
	1-24	★86-535-242-210	LEVER, EJECT L		1
	1-25	---	CHASSIS, AMP		1
	1-26	---	HOLDER, PCB		4
	1-27	★81-VX1-012-019	FOOT, REAR		2
	1-28	★81-VW1-002-019	PANEL, REAR(YH)	*	1
	1-28	★81-VW1-022-019	PANEL, REAR(YJ)	*	1
	1-28	★81-VW1-021-019	PANEL, REAR(YE)	*	1
	1-28	★81-VW1-023-019	PANEL, REAR(YK)	*	1
	1-29	89-VT5-202-010	CORD, BUSHING		1
	1-30	81-VW1-602-010	CORD, FG 15P	*	1
	1-31	★81-VW1-017-019	CABINET, STEEL	*	1

EXPLODED VIEW – 2 (FX – WZ92)

REF.NO.	PART NO.	DESCRIPTION
A	87-251-036-219	U+2-8
B	80-ZM6-207-019	V+1.6-7
C	87-263-033-119	V+2-4
D	86-524-418-019	VFT$_2$+1.4-5
E	87-067-174-019	VTT+2-4
F	87-067-804-010	PW2.23-4.7-0.5
G	87-067-825-010	PW4.1-6.9-0.25
H	80-ZM6-250-010	PW4.8-8.5-0.13
I	87-067-825-010	PW4.1-6.9-0.25

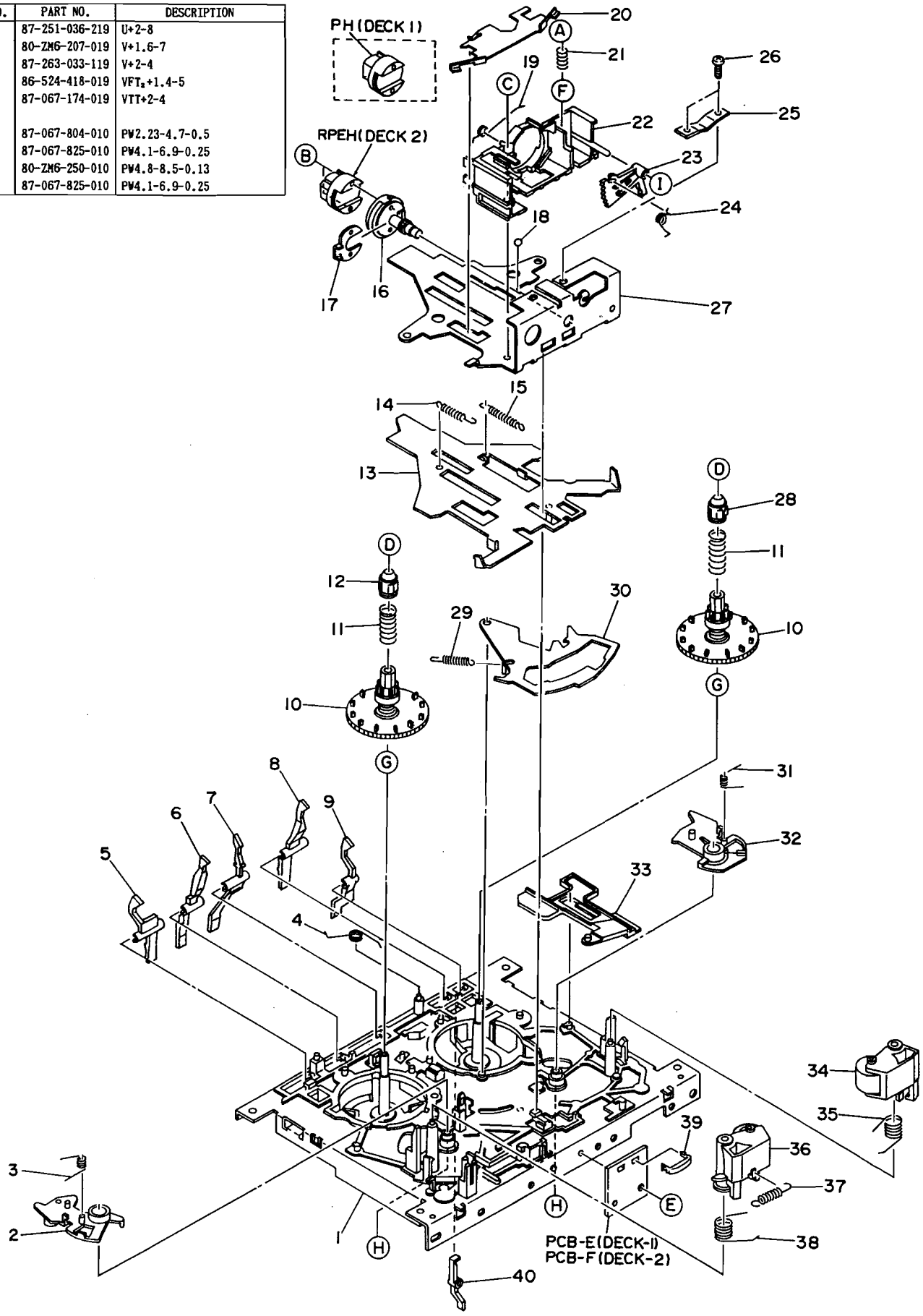

PART NO. CHANGED TO	REF. NO.	PART NO.	DESCRIPTION	COMMON MODEL	Q. TY
	2-1	★80-ZM6-201-510	CHASSIS ASSY B		1
	2-2	★86-535-239-110	LEVER, PLAY R		1
	2-3	★86-535-283-010	T-SPRING, PLAY GEAR R		1
	2-4	★80-ZM6-206-010	T-SPRING, CASSETTE		1
	2-5	★86-575-322-010	LEVER, REC A (D2)	*	1
	2-6	★86-575-325-210	LEVER, METAL (D2)	*	1
	2-7	★86-575-324-110	LEVER, CASSETTE	*	1
	2-8	★86-575-327-210	LEVER, CLOME	*	1
	2-9	★86-575-323-010	LEVER, REC B (D2)	*	1
	2-10	80-ZM6-254-110	GEAR REEL ASSY L		2
	2-11	★86-535-293-010	C-SPRING, REEL TABLE		2
	2-12	★86-524-218-219	STOPPER, S REEL TABLE		1
	2-13	★86-535-215-310	SLIDE PLATE ASSY		1
	2-14	★86-535-285-110	E-SPRING, SLIDE		1
	2-15	★86-575-226-010	E-SPRING, HEAD CHASSIS	*	1
	2-16	86-575-306-810	HOLDER, HOUSING	*	1
	2-17	★86-575-305-010	PLATE, HOUSING	*	1
	2-18	★87-073-018-010	BOARD, STEEL 1.588		1
	2-19	★86-575-310-210	T-SPRING, HEAD	*	1
	2-20	★86-575-347-110	P-SPRING, HEAD 2	*	1
	2-21	★86-541-318-110	C-SPRING, AZIMUTH		1
	2-22	86-575-288-410	GUIDE, TAPE	*	1
	2-23	★86-575-290-210	GEAR, SEGUMENT	*	1
	2-24	★80-ZM6-229-010	T-SPRING, SEGUMENT GEAR 2		1
	2-25	★86-575-343-110	P-SPRING, AZIMUTH 2	*	1
	2-26	★80-ZM6-251-019	SCREW, AZIMUTH 3H		2
	2-27	★86-575-311-410	CHASSIS, HEAD	*	1
	2-28	★86-524-233-219	STOPPER, T REEL PLATE		1
	2-29	★86-535-284-010	E-SPRING, DIRECTION LEVER		1
	2-30	★86-535-218-210	DIRECTION LEVER ASSY		1
	2-31	★86-535-282-010	T-SPRING, PLAY GEAR F		1
	2-32	★86-535-238-210	LEVER, PLAY F		1
	2-33	★86-575-345-210	LEVER, SW2	*	1
	2-34	★86-535-226-210	PINCH LEVER ASSY F		1
	2-35	★86-575-222-110	T-SPRING, PINCH ROLLER F	*	1
	2-36	★86-535-228-310	PINCH LEVER ASSY R		1
	2-37	★86-575-339-010	E-SPRING, PINCH 22	*	1
	2-38	★86-575-341-110	T-SPRING, PINCH L	*	1
	2-39	★86-575-342-010	HOLDER, WIRE 2	*	1
	2-40	★86-575-326-210	LEVER, RINK	*	1

EXPLODED VIEW – 3 (FX – WZ92)

REF.NO.	PART NO.	DESCRIPTION	REF.NO.	PART NO.	DESCRIPTION	REF.NO.	PART NO.	DESCRIPTION
A	86-524-457-010	U+2.6-5.5	D	87-081-489-019	PW1.7-3.5-0.25 SLOT	G	86-575-353-019	PW2.3-5-0.5
B	87-741-073-410	UT_a+2.6-6	E	87-067-380-019	PW1.7-7-0.5	H	86-575-355-010	PW3.2-2.3-0.1
C	87-081-501-019	VTT+2.6-4	F	80-ZM6-211-010	PW2.68-4.15-0.3 SLOT			

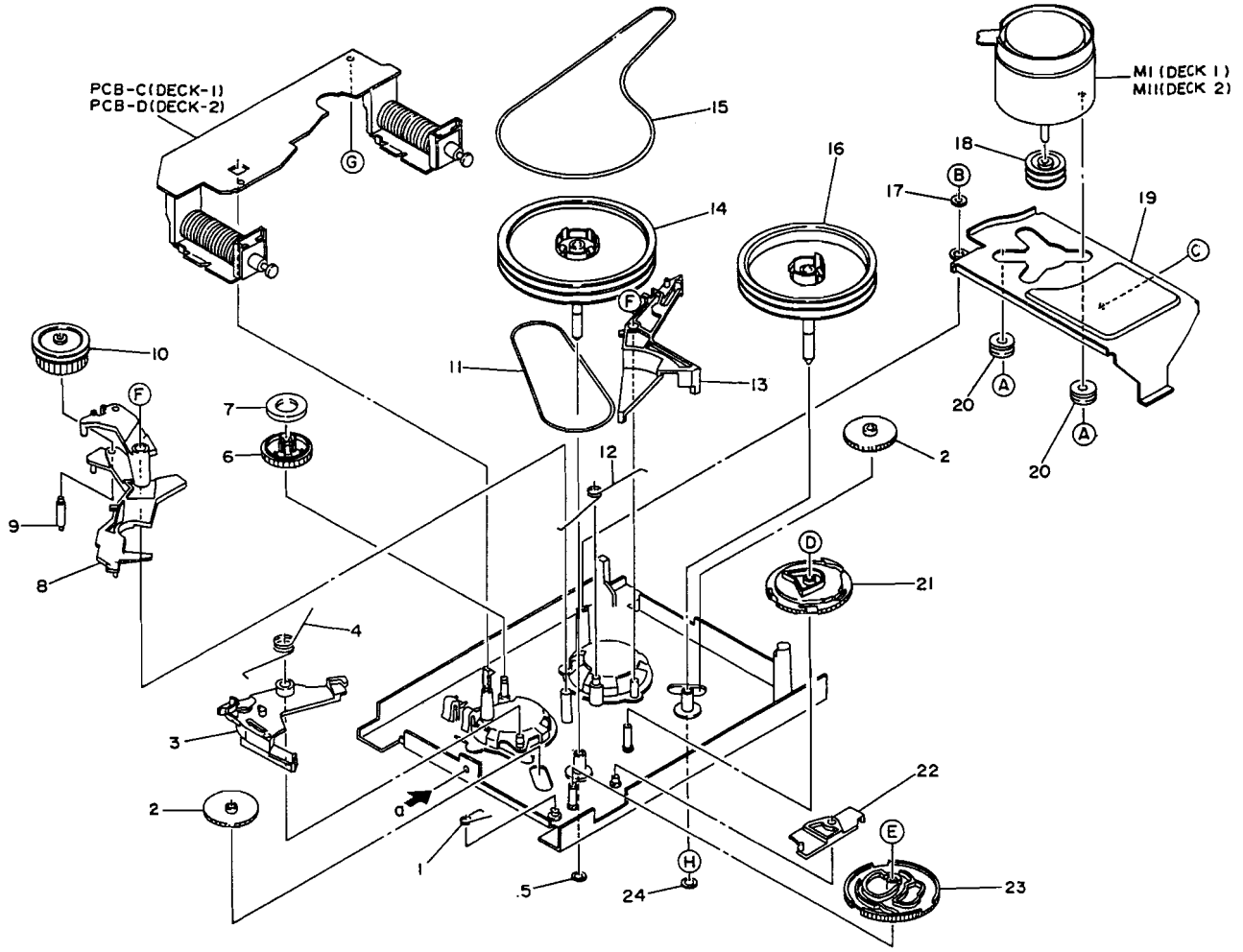

PART NO. CHANGED TO	REF. NO.	PART NO.	DESCRIPTION	COMMON MODEL	Q. TY
	3-1	★86-535-291-210	T-SPRING, FR CAM		1
	3-2	★86-575-221-210	GEAR, PLAY	*	2
	3-3	★86-535-230-510	LEVER, FR TRIGGER		1
	3-4	★80-ZM6-220-010	T-SPRING, FR		1
	3-5	★80-ZM6-242-010	SHEET, 1.95-3.6-0.5 SLT		2
	3-6	★86-575-328-110	GEAR, IDLER	*	1
	3-7	★80-ZM6-217-010	RING, MAGUNET		1
	3-8	★80-ZM6-218-110	LEVER, FR 2		1
	3-9	★80-ZM6-222-010	SHAFT, PULLY FR		1
	3-10	★80-ZM6-221-010	GEAR, FR 2		1
	3-11	★80-ZM6-227-110	BELT, SQ 1.2-140		1
	3-12	★80-ZM6-205-110	T-SPRING, MAIN		1
	3-13	★86-535-231-410	LEVER, PLAY TRIGGER		1
	3-14	80-ZM6-208-210	FLYWHEEL ASSY L1		1
	3-15	86-575-302-110	BELT, SQ 1.3-213	*	1
	3-16	80-ZM6-203-110	FLYWHEEL ASSY R1		1
	3-17	★80-ZM6-246-010	COLLAR, MOTOR		1
	3-18	★86-575-303-110	PULLY, MOTOR 2	*	1
	3-19	★86-575-301-110	HOLDER, MOTOR	*	1
	3-20	★86-513-441-110	COLLAR		2
	3-21	★86-575-312-110	CAM, MAIN	*	1
	3-22	★86-575-229-210	LEVER, PAUSE B	*	1
	3-23	★80-ZM6-219-110	CAM, FR MK2 2M		1
	3-24	★80-ZM6-243-010	SHEET, 175-3.6-0.5		1

SPRING APPLICATION POSITION (FX – WZ92)

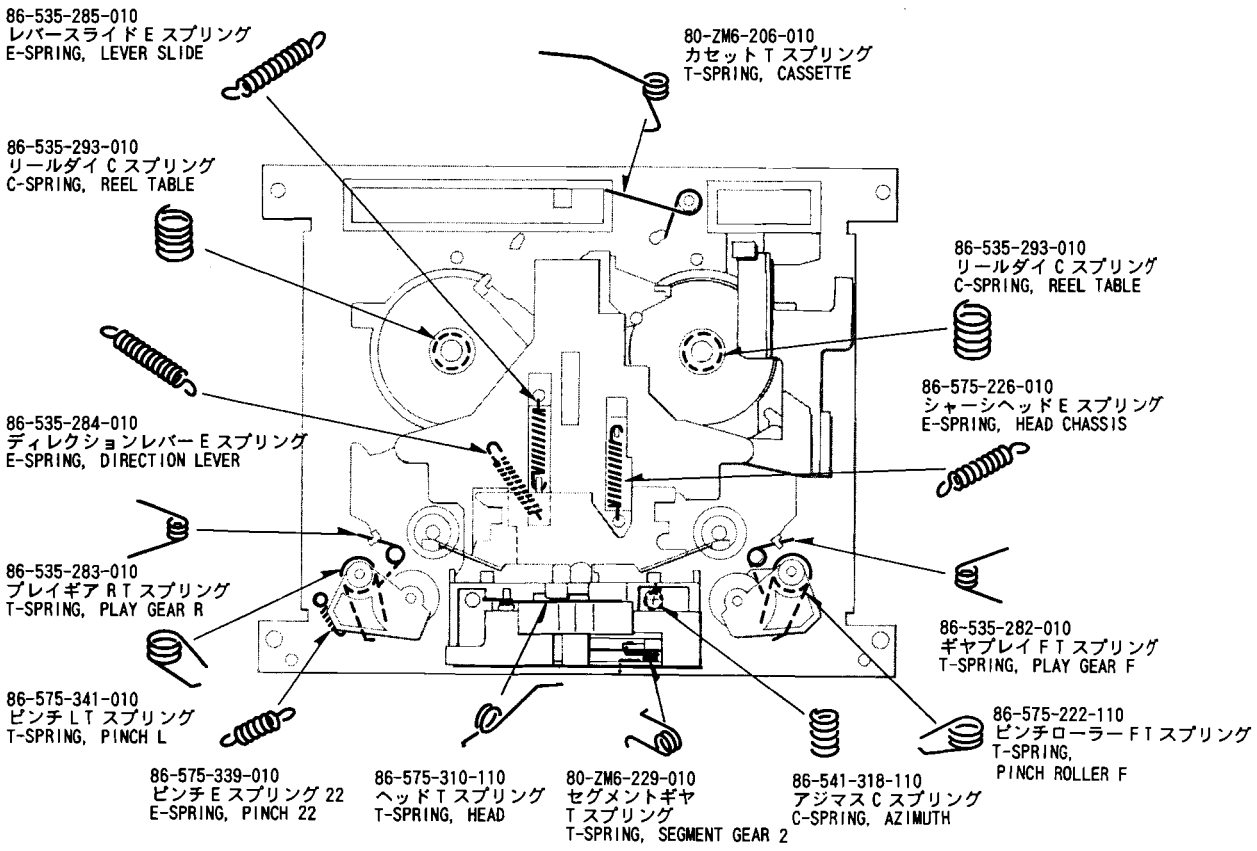

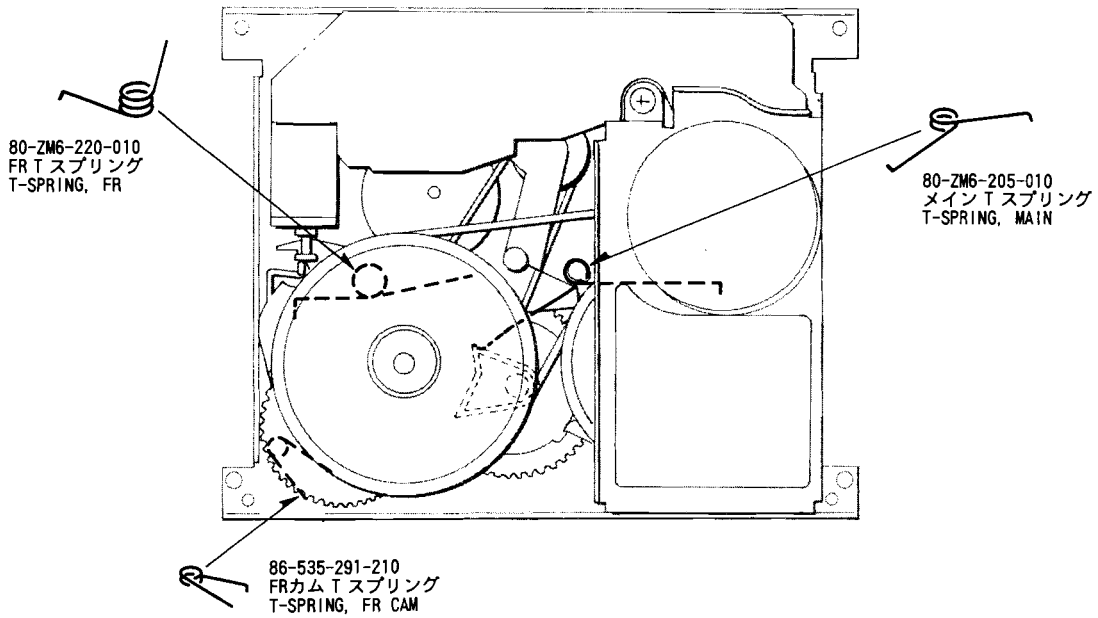

MODEL NO.

TX – Z92

CAUTIONS WHEN SERVICING (TX – Z92)

Model TX – Z92 does not have a power supply circuit. Power is supplied to it through a 15 – pin flat cable and the signal inputs/outputs are also performed through this cable.

When servicing the TX – Z92 connect it to the MX – Z92M so that power is supplied to the TX – Z92. If the MX – Z92M is not available, follow the procedure below.

[When servicing the unassembled TX – Z92]

①Supply the following voltages to each FC801 terminal from an external power supply.

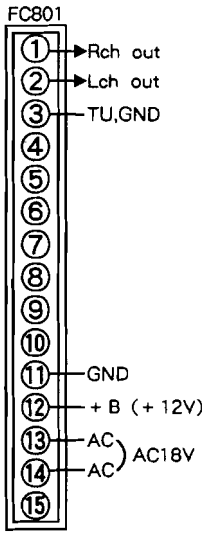

②Connection diagram when using multi power supply (LPS-9088).

Turn the TX-Z92 on using the SLEEP function or TIMER mode since the POWER ON signal is not supplied.

Connect the multi-conversion harness for the D5 type to J1.

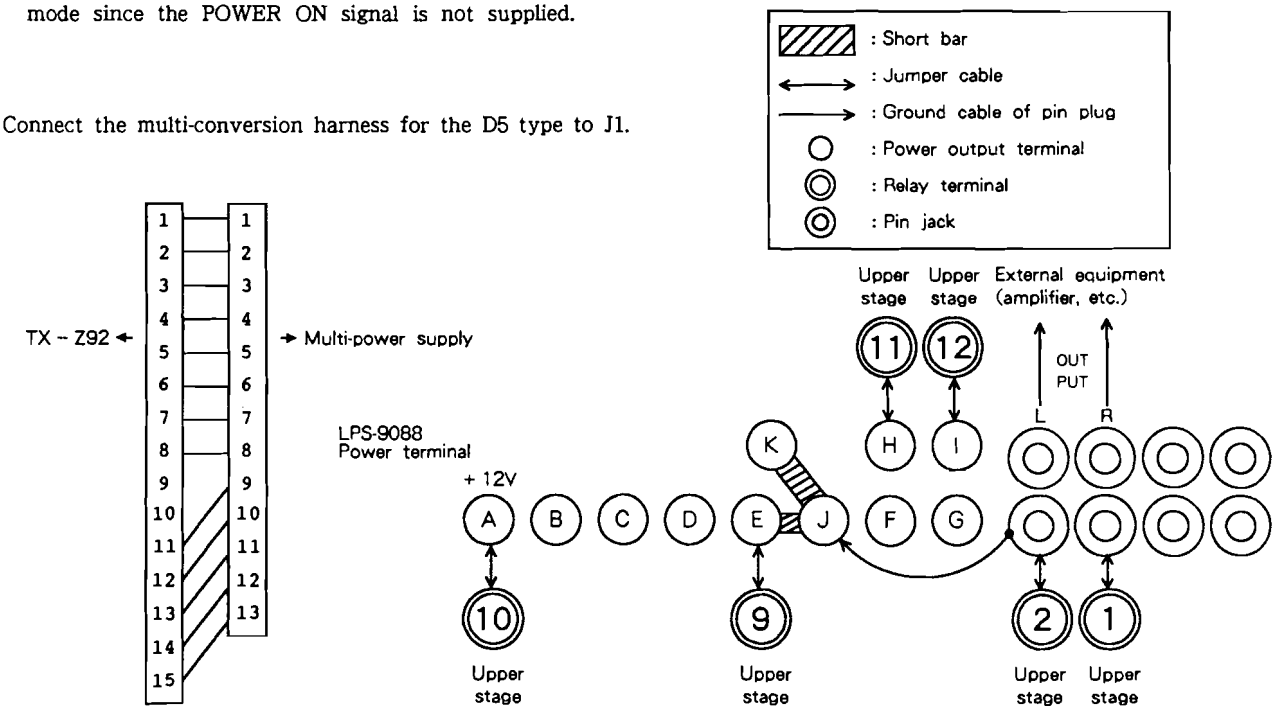

Connection diagram of multi-conversion harness

ELECTRICAL MAIN PARTS LIST (TX – Z92)

REF. NO.	PART NO.	DESCRIPTION
=== IC ===		
	87-001-942-010	IC, LA1265SG
	87-001-376-010	IC, LC7218
	87-001-790-010	IC, SBX1610-52 (REMOTE SENSOR)
	87-020-446-010	IC, TA7343AP
	81-VT1-610-010	IC, UPD75268CW-029
=== TRANSISTOR ===		
	89-502-094-010	FET, 2SK209Y
	89-502-115-010	FET, 2SK211GR
	89-503-025-010	FET, 2SK302GR
	89-110-485-010	TRANSISTOR, 2SA1048GR
	89-316-235-010	TRANSISTOR, 2SC1623L5
	89-318-155-010	TRANSISTOR, 2SC1815GR
	89-320-011-010	TRANSISTOR, 2SC2001K
	89-324-585-010	TRANSISTOR, 2SC2458GR
	89-327-125-010	TRANSISTOR, 2SC2712GR
	89-327-143-010	TRANSISTOR, 2SC2714(O)
	89-333-266-010	TRANSISTOR, 2SC3326B
	87-026-230-010	TRANSISTOR, DTA114YK
	87-026-214-010	TRANSISTOR, DTA114YS
=== DIODE ===		
	87-020-110-010	DIODE, 1SS177
	87-020-125-010	DIODE, CHIP 1SS181
	87-020-027-010	DIODE, CHIP 1SS184
	87-020-585-010	DIODE, ZENER 02CZ6.2Y
	87-020-583-010	DIODE, ZENER CHIP 02CZ5.1Y
	87-027-449-010	DIODE, ZENER HZ15-3L
=== MAIN CIRCUIT BOARD SECTION ===		
C1	★87-010-312-010	CAP, CHIP S 15P-50 CH
C2	★87-010-197-010	CAP, CHIP S 0.01-25 B
C3	★87-010-197-010	CAP, CHIP S 0.01-25 B
C4	★87-010-197-010	CAP, CHIP S 0.01-25 B
C5	★87-010-197-010	CAP, CHIP S 0.01-25 B
C6	★87-010-197-010	CAP, CHIP S 0.01-25 B
C7	★87-010-150-010	CAP, CHIP S 6P-50 CH(E, K)
C7	★87-010-147-010	CAP, CHIP S 3P-50 CH(Z)
C8	★87-018-102-010	CAP, CERA-SOL U 6.8P-50 SL(E, K)
C9	★87-010-158-010	CAP, CHIP S 22P-50 SL
C10	★87-010-154-010	CAP, CHIP S 10P-50 CH
C11	★87-010-312-010	CAP, CHIP S 15P-50 CH
C12	★87-010-312-010	CAP, CHIP S 15P-50 CH
C13	★87-010-197-010	CAP, CHIP S 0.01-25 B
C14	★87-010-146-010	CAP, CHIP S 2P-50 CH
C15	★87-010-145-010	CAP, CHIP S 1P-50 CH(E, K)
C15	★87-010-148-010	CAP, CHIP S 4P-50 CH(Z)
C16	★87-010-154-010	CAP, CHIP S 10P-50 CH(E, K)
C16	★87-010-149-010	CAP, CHIP S 5P-50 CH(Z)
C17	★87-010-197-010	CAP, CHIP S 0.01-25 B
C18	★87-010-170-010	CAP, CHIP S 220P-50 SL
C19	★87-010-197-010	CAP, CHIP S 0.01-25 B
C20	★87-010-197-010	CAP, CHIP S 0.01-25 B
C21	★87-010-197-010	CAP, CHIP S 0.01-25 B
C22	★87-010-400-010	CAP, ELECT 0.47-50 SME
C23	★87-010-197-010	CAP, CHIP S 0.01-25 B
C24	★87-010-149-010	CAP, CHIP S 5P-50 CH
C25	★87-010-197-010	CAP, CHIP S 0.01-25 B(E, K)
C26	★87-010-312-010	CAP, CHIP S 15P-50 CH
C27	★87-010-197-010	CAP, CHIP S 0.01-25 B
C30	★87-010-401-010	CAP, ELECT 1-50 SME
C31	★87-010-197-010	CAP, CHIP S 0.01-25 B
C32	★87-010-197-010	CAP, CHIP S 0.01-25 B
C33	★87-010-405-010	CAP, ELECT 10-50 SME
C34	★87-010-166-010	CAP, CHIP S 100P-50 SL
C35	★87-010-197-010	CAP, CHIP S 0.01-25 B
C36	★87-010-401-010	CAP, ELECT 1-50 SME
C37	★87-010-404-010	CAP, ELECT 4.7-50 SME
C38	★87-010-405-010	CAP, ELECT 10-50 SME
C39	★87-010-544-010	CAP, ELECT 0.1-50
C40	★87-010-403-010	CAP, ELECT 3.3-50 SME
C41	★87-010-404-010	CAP, ELECT 4.7-50 SME
C42	★87-010-404-080	CAP, ELECT 4.7-50 SME(Z)
C43	★87-010-197-010	CAP, CHIP S 0.01-25 B
C45	★87-010-404-010	CAP, ELECT 4.7-50 SME
C46	★87-010-197-010	CAP, CHIP S 0.01-25 B
C47	★87-010-197-010	CAP, CHIP S 0.01-25 B
C48	★87-010-197-010	CAP, CHIP S 0.01-25 B
C49	★87-010-197-010	CAP, CHIP S 0.01-25 B
C50	★87-010-197-010	CAP, CHIP S 0.01-25 B
C51	★87-010-197-010	CAP, CHIP S 0.01-25 B
C52	★87-010-197-080	CAP, CHIP S 0.01-25 B
C53	★87-010-196-010	CAP, CHIP S 0.1-25 F
C54	★87-010-197-080	CAP, CHIP S 0.01-25 B
C55	★87-014-049-089	CAP, PP 470P-100 J
C56	★87-010-158-010	CAP, CHIP S 22P-50 CH
C57	★87-010-169-089	CAP, SHIP S 180P-50 SL
C58	★87-014-050-089	CAP, PP 510P-100 J
C60	★87-010-404-010	CAP, ELECT 4.7-50 SME(Z)
C61	★87-010-401-010	CAP, ELECT 1-50 SME
C62	★87-010-403-010	CAP, ELECT 3.3-50 SME
C63	★87-014-057-010	CAP, PP 1000P-100 J
C64	★87-010-405-010	CAP, ELECT 10-50 SME
C67	★87-010-220-010	CAP, CHIP S 0.018-25 B
C68	★87-010-220-010	CAP, CHIP S 0.018-25 B
C69	★87-010-404-010	CAP, ELECT 4.7-50 SME
C70	★87-010-404-010	CAP, ELECT 4.7-50 SME
C73	★87-010-404-010	CAP, ELECT 4.7-50 SME
C74	★87-010-404-010	CAP, ELECT 4.7-50 SME
C75	★87-010-248-010	CAP, ELECT 220-10 SME
C76	★87-010-312-010	CAP, CHIP S 15P-50 CH
C77	★87-010-197-010	CAP, CHIP S 0.01-25 B
C78	★87-010-197-010	CAP, CHIP S 0.01-25 B
C79	★87-010-197-010	CAP, CHIP S 0.01-25 B
C80	★87-010-384-010	CAP, ELECT 100-25 SME
C81	★87-010-186-010	CAP, CHIP S 4700P-50 B
C82	★87-010-400-010	CAP, ELECT 0.47-50 SME
C83	★87-015-762-010	CAP, CHIP 68P SL
C84	★87-010-164-010	CAP, CHIP S 68P-50 SL
C85	★87-010-164-010	CAP, CHIP S 68P-50 SL
C86	★87-018-134-010	CAP, CERA-SOL U 0.01-16 Y
C87	★87-010-263-010	CAP, ELECT 100-10
C88	★87-010-381-010	CAP, ELECT 330-16 SME
C100	★87-010-197-010	CAP, CHIP S 0.01-25 B
C101	★87-010-197-010	CAP, CHIP S 0.01-25 B
C102	★87-010-311-080	CAP, CHIP S 12P-50 CH
C103	★87-010-197-080	CAP, CHIP S 0.01-25(E, K)
C103	★87-010-311-080	CAP, CHIP S 12P-50 CH(Z)
C104	★87-015-819-010	CAP, CHIP 0.01 BK
C106	★87-010-145-080	CAP, CHIP 1P-50 CH(Z)
C110	★87-010-263-010	CAP, ELECT 100-10
C111	★87-010-405-010	CAP, ELECT 10-50 SME
C112	★87-010-401-010	CAP, ELECT 1-50 SME
CF1	87-030-105-010	FILTER, BPMB6A(Z)
CF2	★87-008-261-010	FILTER, SFE10.7MA5-A
CF3	87-008-261-010	FILTER, SFE10.7MA5-A(Z)

REF. NO.	PART NO.	DESCRIPTION
CF4	★87-008-261-010	FILTER, SFE10. 7MA5-A
CF5	★82-794-670-010	FILTER, CERAMIC BFU450C4N
D1	87-026-360-010	VARI CAP, CHIP KV1430
D2	87-026-360-010	VARI CAP, CHIP KV1430
D4	87-026-360-010	VARI CAP, CHIP KV1430
D6	81-754-634-099	VARI CAP, KV1260
D7	87-026-360-010	VARI CAP, CHIP KV1430(Z)
J1	81-631-646-010	ANT TERMINAL 2P PAL(ANTENNA)
J2	81-754-629-010	CONNECTOR 2P UL(MW/LW LOOP ANT)
L1	★87-006-209-010	COIL, ANT FM 3/4T, L5
L2	★87-006-210-010	COIL, ANT FM2-3/4TSL5
L3	★87-006-200-010	COIL, RF FM 3-1/2T, L5
L4	★87-006-201-010	COIL, RF FM 3-1/2TS, L5
L5	★87-006-201-010	COIL, RF FM 3-1/2TS, L5(Z)
L6	★87-006-205-010	COIL, OSC FM(7K)
L7	★87-003-231-010	COIL, CHIP S 1UH
L8	★87-008-427-010	COIL, FM IFT
L9	★81-631-611-010	COIL, QUAD(SINGLE)
L11	★87-008-452-010	FILTER, CFAZ450
L12	87-006-207-010	COIL, ANT MW(3B)
L13	87-006-208-010	COIL, ANT LW
L14	87-794-687-010	COIL, OSC MW
L15	★87-008-461-010	COIL, 2POLE MPX
L16	★87-008-461-010	COIL, 2POLE MPX
L17	87-794-688-010	COIL, OSC LW
L18	87-008-421-010	FILTER ANTI BIRDIE(Z)
L19	★87-003-098-010	COIL, 2. 2UH
SFR1	★87-003-174-010	SFR, 33K
SFR2	★87-024-171-010	SFR, 4. 7K
TC1	★87-011-219-010	CAP, TRIMMER 10P
TC2	★87-011-219-010	CAP, TRIMMER 10P
TC3	★87-011-219-010	CAP, TRIMMER 10P(Z)
TC4	★87-011-220-080	CAP TRIMMER 20P
TC5	★87-011-221-010	CAP, TRIMMER 30P
TC6	★87-011-221-010	CAP, TRIMMER 30P
X1	★87-030-163-010	RESONATOR, CRYSTAL 7. 2MHZ(NDK)

=== RELAY CIRCUIT BOARD SECTION ===

=== FRONT CIRCUIT BOARD SECTION ===

C901	★87-018-131-010	CAP, CERA-SOL U 1000P-50 B
C902	★87-010-553-010	CAP, ELECT 47-16
C903	★87-010-498-010	CAP, ELECT 10-16 SME
C904	★87-010-401-010	CAP, ELECT 1-50 SME
C905	★87-018-131-010	CAP, CERA-SOL U 1000P-50 B
C906	★87-010-497-010	CAP, ELECT 4. 7-35 SME
C907	★87-010-401-010	CAP, ELECT 1-50 SME
C908	★87-010-401-010	CAP, ELECT 1-50 SME
C909	★87-018-134-010	CAP, CERA-SOL U 0. 01-16 Y
C910	★87-018-131-010	CAP, ELECT 1000-6. 3
C911	★87-018-209-010	CAP, CERA-SOL U 0. 1-50 F
C912	★87-018-209-010	CAP, CERA-SOL U 0. 1-50 F
C913	★87-018-209-010	CAP, CERA-SOL U 0. 1-50 F
C917	★87-010-497-010	CAP, ELECT 4. 7-35
CF901	★87-008-394-010	FILTER, CERAMIC CST 4. 19MGW
FL901	80-VT1-608-010	FL, 9BT-83GK TU(DISPLAY)
L901	★87-003-102-010	COIL, 10UH
L902	★87-003-102-010	COIL, 10UH
L903	★87-003-102-010	COIL, 10UH
L904	★87-003-102-010	COIL, 10UH
SW901	87-036-142-010	SW, TACT(BAND)
SW902	87-036-142-010	SW, TACT(TUNING UP)
SW903	87-036-142-010	SW, TACT(TUNING DOWN)
SW904	87-036-142-010	SW, TACT(10)
SW905	87-036-142-010	SW, TACT(9)
SW906	87-036-142-010	SW, TACT(8)
SW907	87-036-142-010	SW, TACT(7)
SW908	87-036-142-010	SW, TACT(6)
SW909	87-036-142-010	SW, TACT(5)
SW910	87-036-142-010	SW, TACT(SET)
SW911	87-036-142-010	SW, TACT(ST/MONO)
SW912	87-036-142-010	SW, TACT(4)
SW913	87-036-142-010	SW, TACT(3)
SW914	87-036-142-010	SW, TACT(CLOCK/TIMER)
SW915	87-036-142-010	SW, TACT(STANDBY)
SW916	87-036-142-010	SW, TACT(2)
SW917	87-036-142-010	SW, TACT(1)
SW918	87-036-142-010	SW, TACT(SLEEP)

=== POWER CIRCUIT BOARD SECTION ===

C801	★87-010-247-010	CAP, ELECT 100-50 SME
C802	★87-010-374-010	CAP, ELECT 47-10 SME
C807	★87-018-134-010	CAP, CERA-SOL U 0. 01-16 Y
FC801	81-VT1-605-010	CORD, FG15P(AMP)
J801	87-009-065-010	CONNECTOR, 15FG(DECK)
L801	★87-003-136-010	COIL, 100UH
PT801	80-VT1-612-019	TRANSFORMER FL OVT-1

○チップ抵抗部品コード／CHIP RESISTOR PART CODE

チップ抵抗部品コードの成り立ち
Chip resistor part coding

8 8 － □ □ □ － □ □ □

A
抵抗コード
Resistor code

桁表示
Figure

抵抗値
Value of resistor

チップ抵抗
Chip resistor

Wattage 容量	Type 種類	Tolerance 許容誤差	Symbol 記号	Dimensions／寸法(mm) Form/外形	L	W	t	Resistor Code : A 抵抗コード : A
1/32W	1608	±5%	CJ	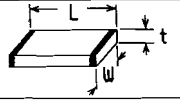	1.6	0.8	0.35	108
1/10W	2125	±5%	CJ		2	1.25	1.45	118
1/8W	3216	±5%	CJ		3.2	1.6	0.5 ～0.7	128

BLOCK DIAGRAM (TX – Z92)

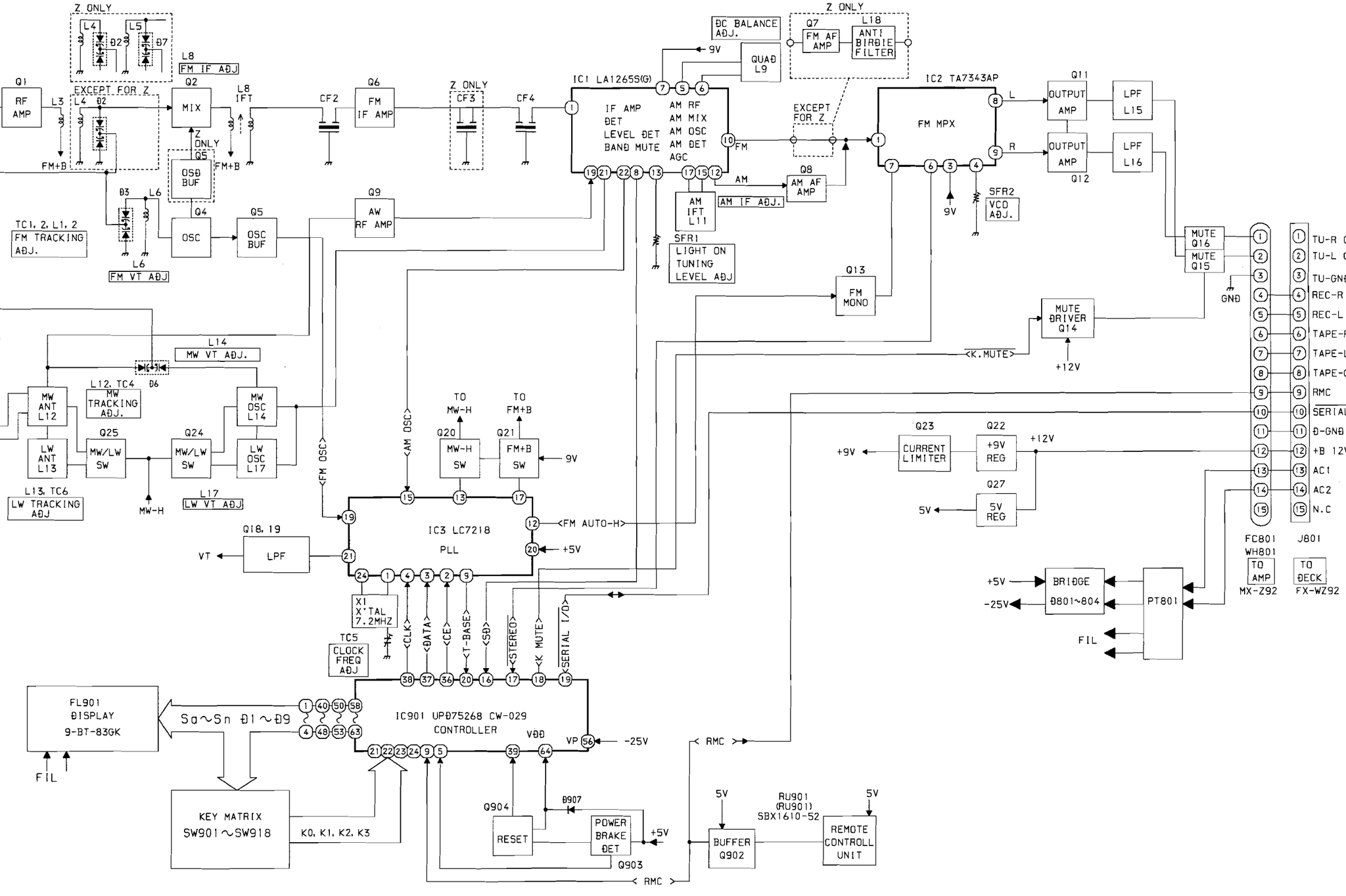

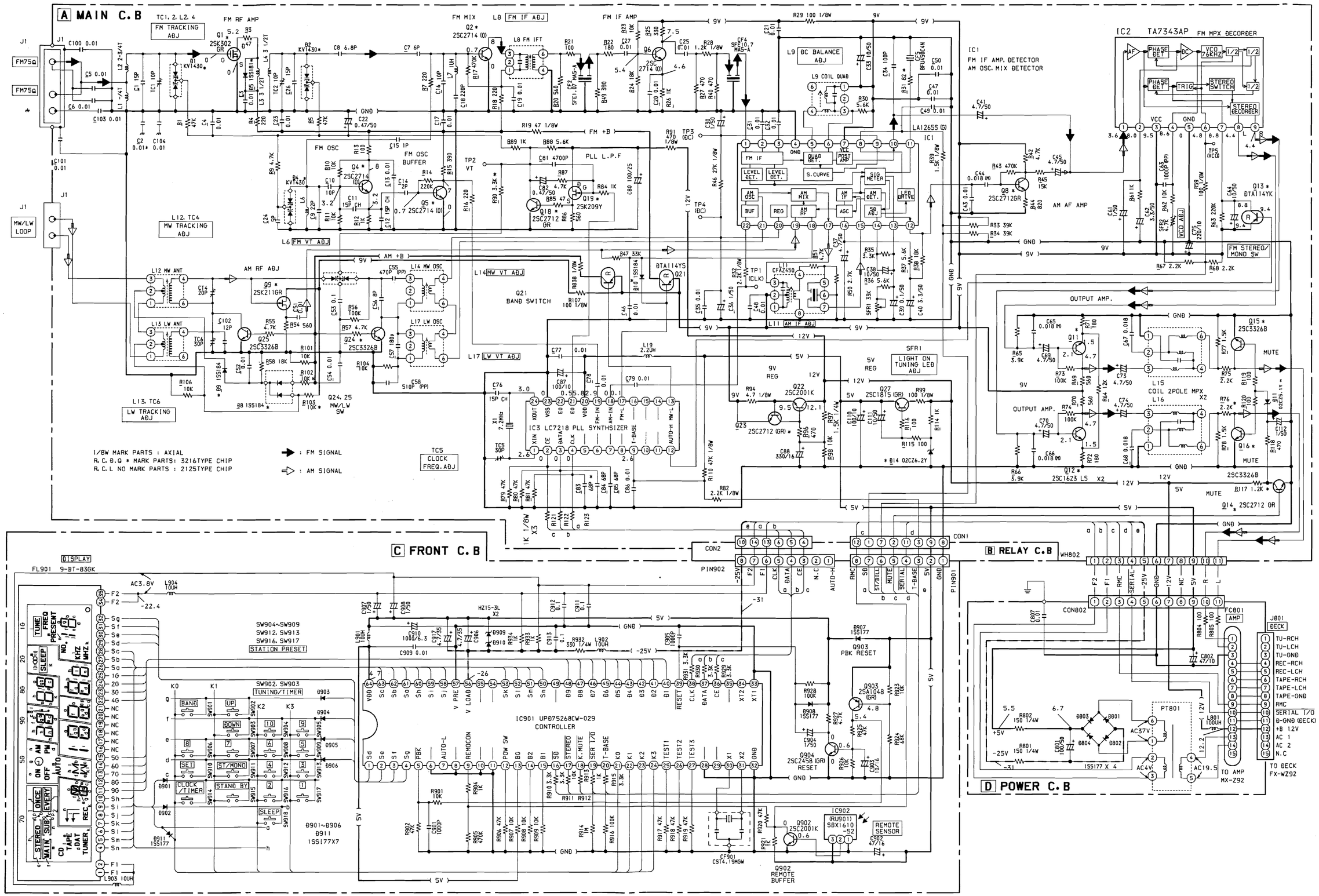
A MAIN C.B
C FRONT C.B
B RELAY C.B
D POWER C.B
IC1 FM IF AMP, DETECTOR AM OSC, MIX DETECTOR
IC2 TA7343AP FM MPX DECORDER
IC3 LC7218 PLL SYNTHESIZER
IC901 UPD75268CW-029 CONTROLLER
IC902 (RU901) SBX1610-52
LA1265S (G)
FM TRACKING ADJ
MW TRACKING ADJ
LW TRACKING ADJ
FM RF AMP
FM MIX
FM IF AMP
FM OSC
FM OSC BUFFER
PLL L.P.F
AM RF ADJ
BAND SWITCH
OUTPUT AMP.
AM AF AMP
FM STEREO/ MONO SW
MUTE
LIGHT ON TUNING LED ADJ
REMOTE SENSOR
REMOTE BUFFER
PBK RESET
RESET
STATION PRESET
TUNING/TIMER
CLOCK /TIMER
STAND BY
SLEEP
1/8W MARK PARTS : AXIAL
R, C, D, Q * MARK PARTS: 3216TYPE CHIP
R, C, L NO MARK PARTS : 2125TYPE CHIP
: FM SIGNAL
: AM SIGNAL
TO AMP MX-Z92
TO DECK FX-WZ92

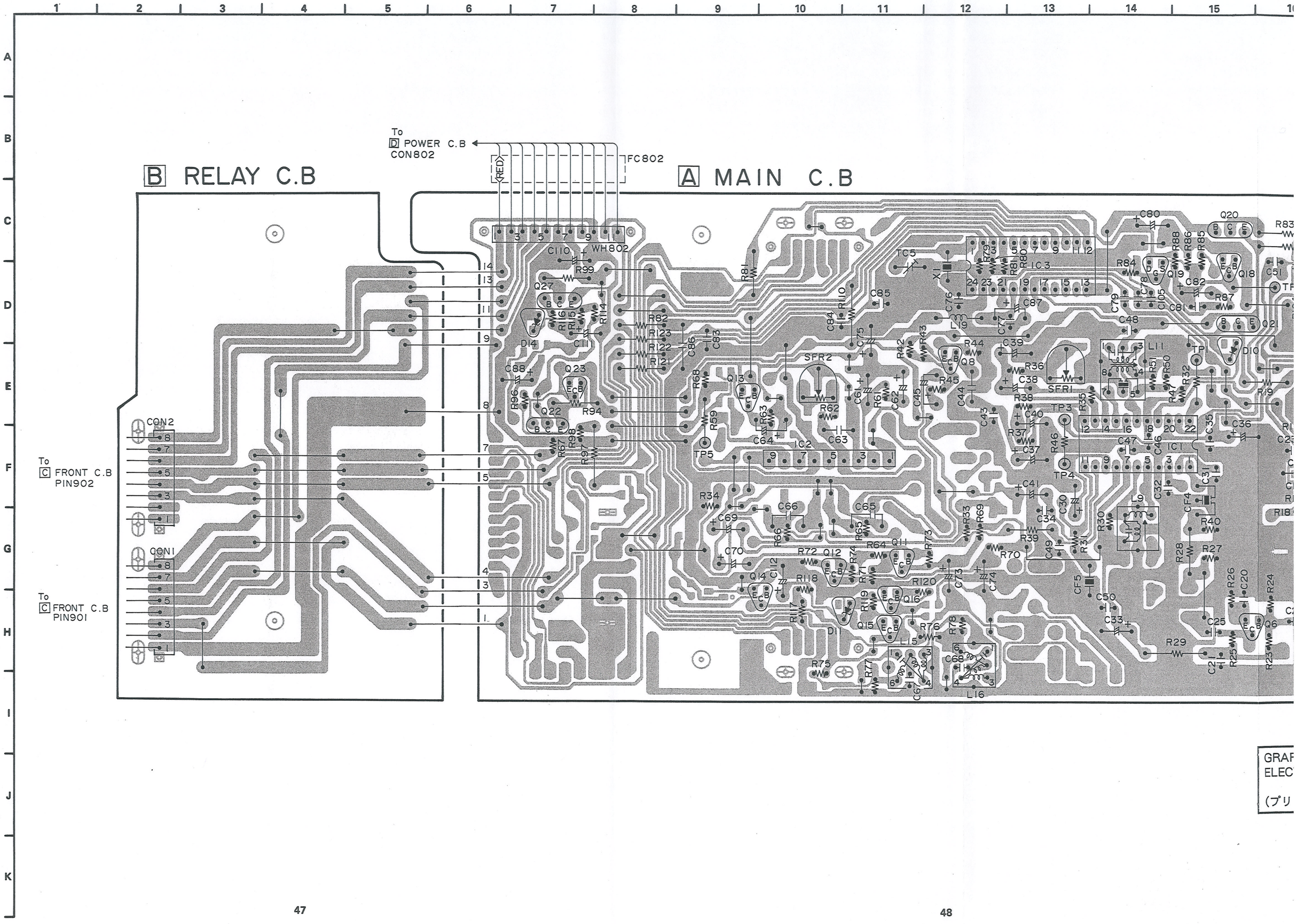

To
D POWER C.B
CON802
FC802
RED
B RELAY C.B
A MAIN C.B
To
C FRONT C.B
PIN902
To
C FRONT C.B
PIN901
CON2
CON1
WH802
SFR1
SFR2
IC1
IC2
IC3

GRAF
ELEC
(プリ

A MAIN C.B

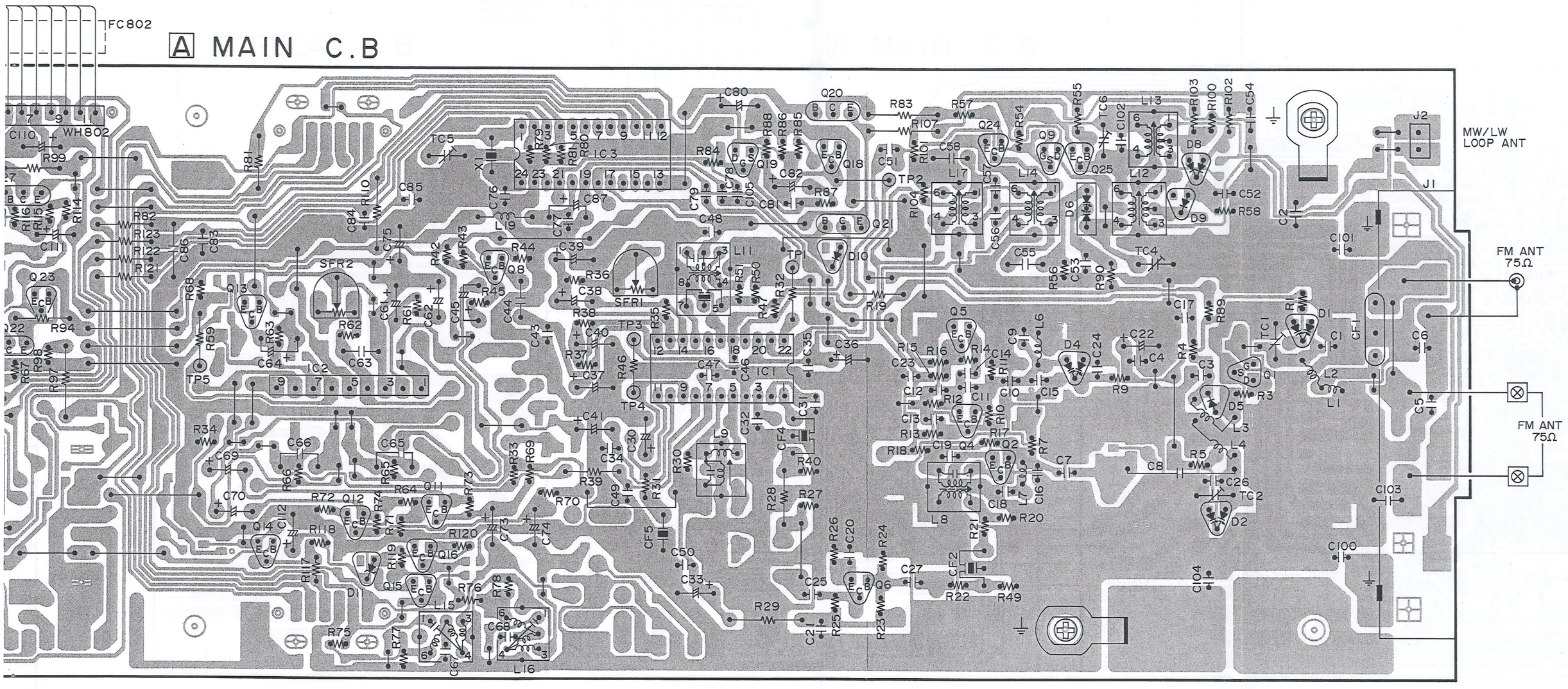

GRAPHIC SYMBOLS PRINTED CIRCUIT BOARD OF ELECT. CAP. ARE DESIGNED AS NEGATIVE POLE.

（プリント基板内のケミコンの極性表示は⊖表示です。）

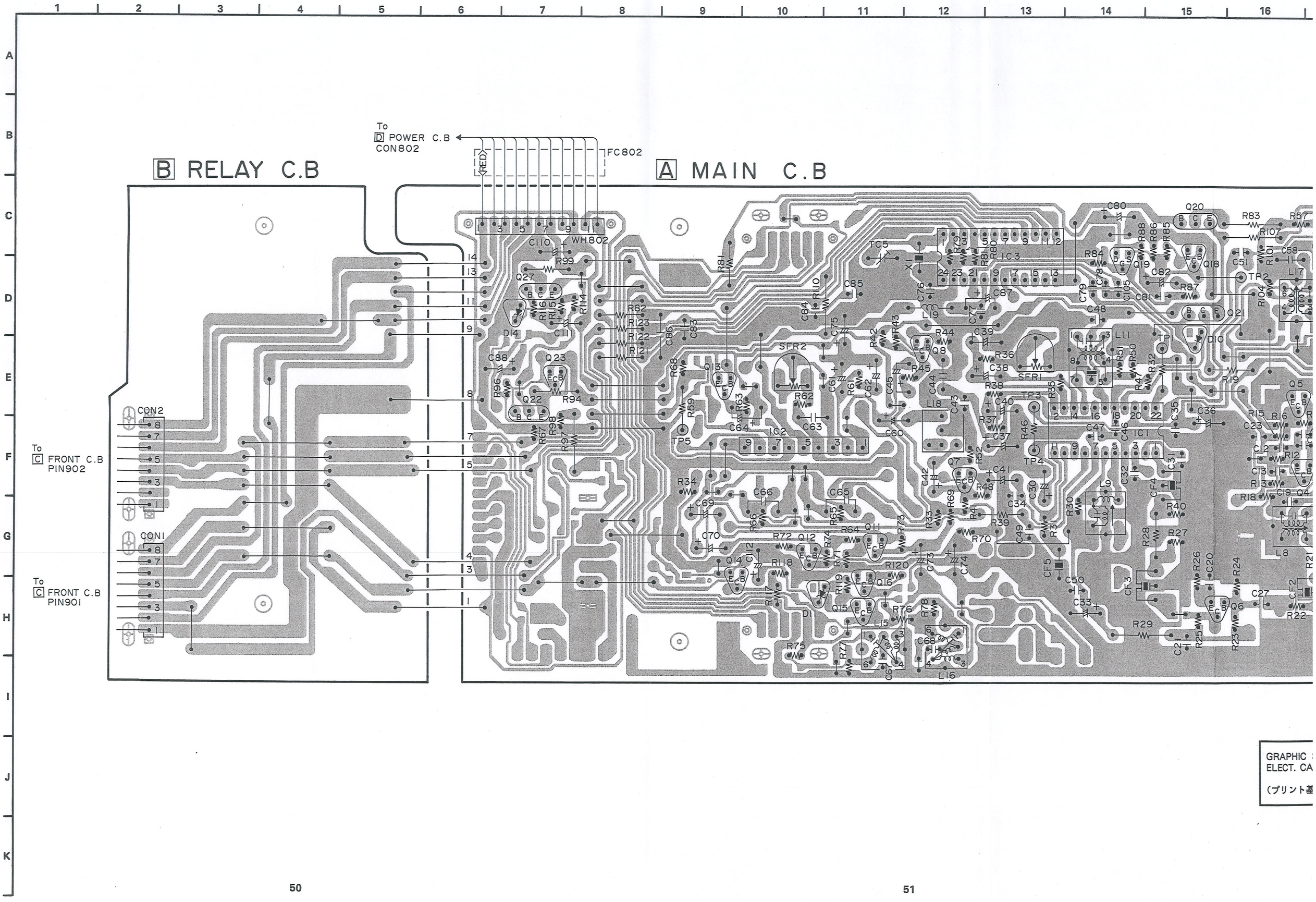

GRAPHIC
ELECT. CA
(プリント基

8 9 10 11 12 13 14 15 16 17 18 19 20 21 22

A MAIN C.B

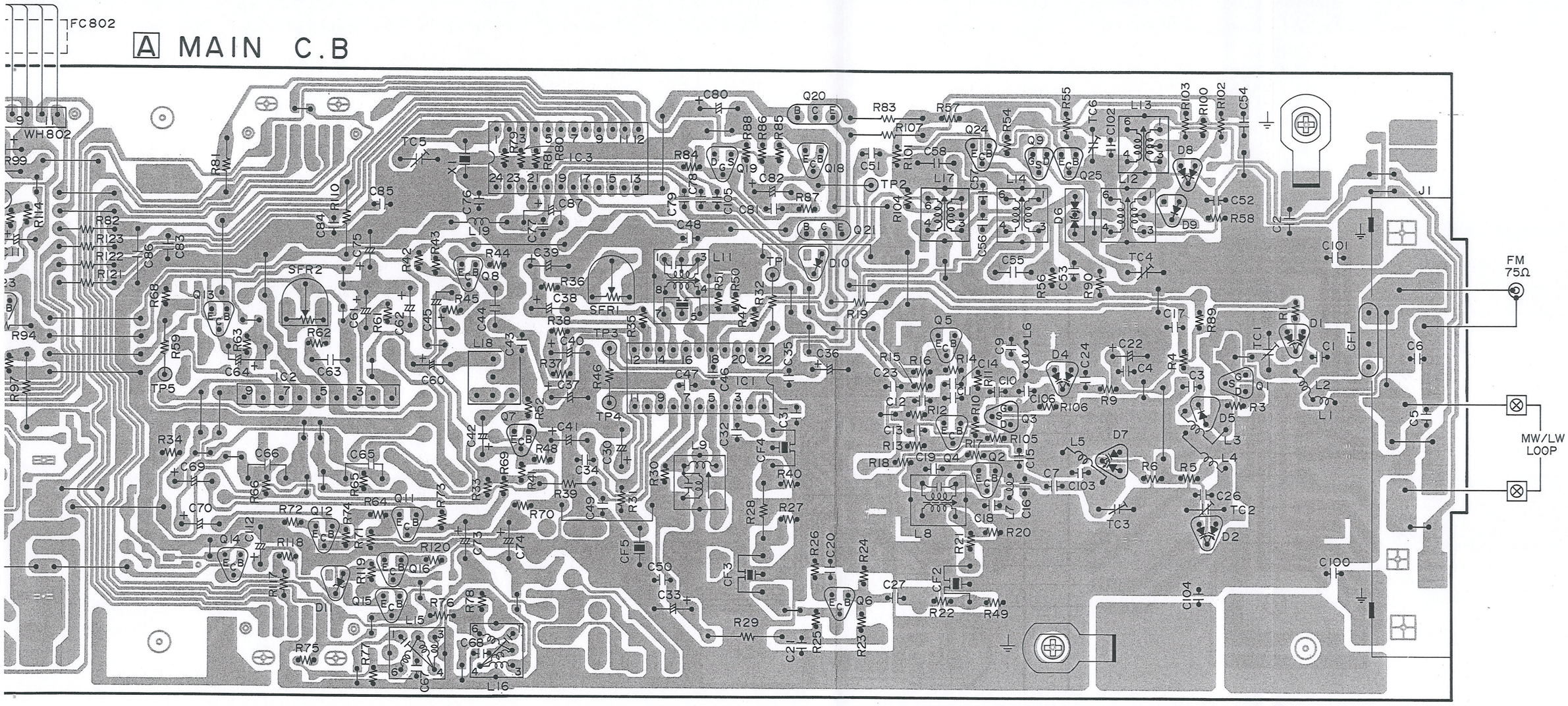

GRAPHIC SYMBOLS PRINTED CIRCUIT BOARD OF ELECT. CAP. ARE DESIGNED AS NEGATIVE POLE.

（プリント基板内のケミコンの極性表示はθ表示です。）

8 9 10 11 12 13 14 15 16 17 18 19 20 21 22

A MAIN C.B

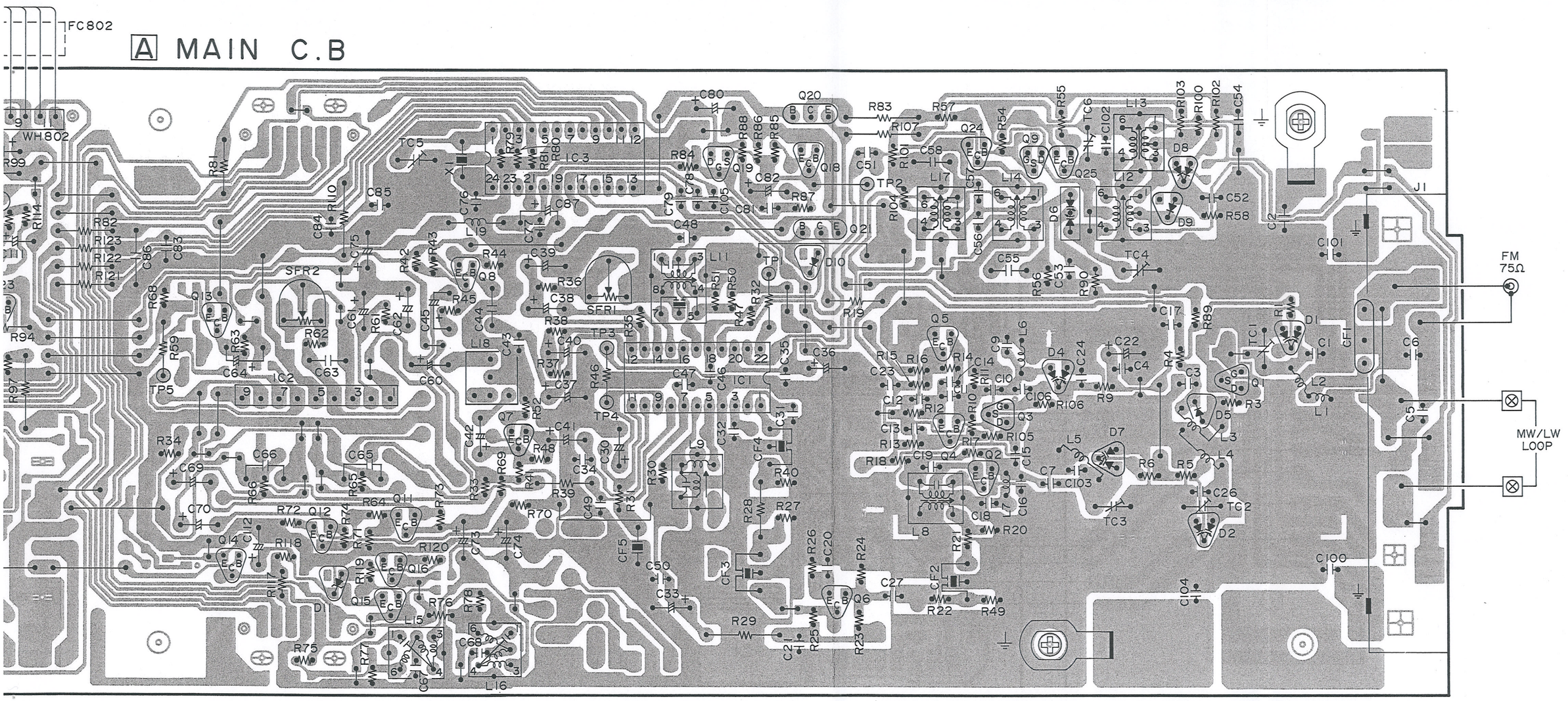

GRAPHIC SYMBOLS PRINTED CIRCUIT BOARD OF ELECT. CAP. ARE DESIGNED AS NEGATIVE POLE.

（プリント基板内のケミコンの極性表示はθ表示です。）

SCHEMATIC DIAGRAM – 2 (TX – Z92Z)

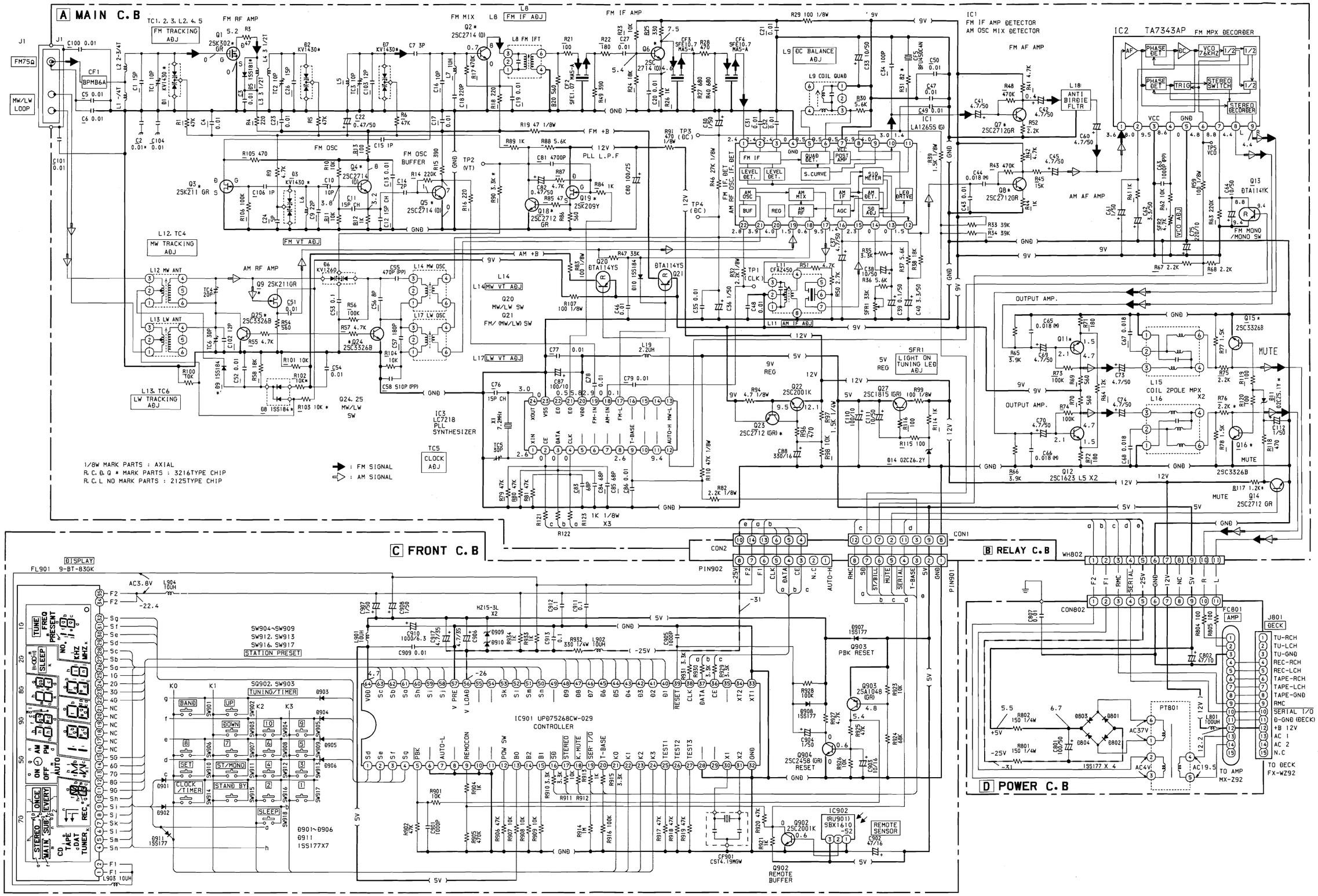

ADJUSTMENT (TX – Z92)

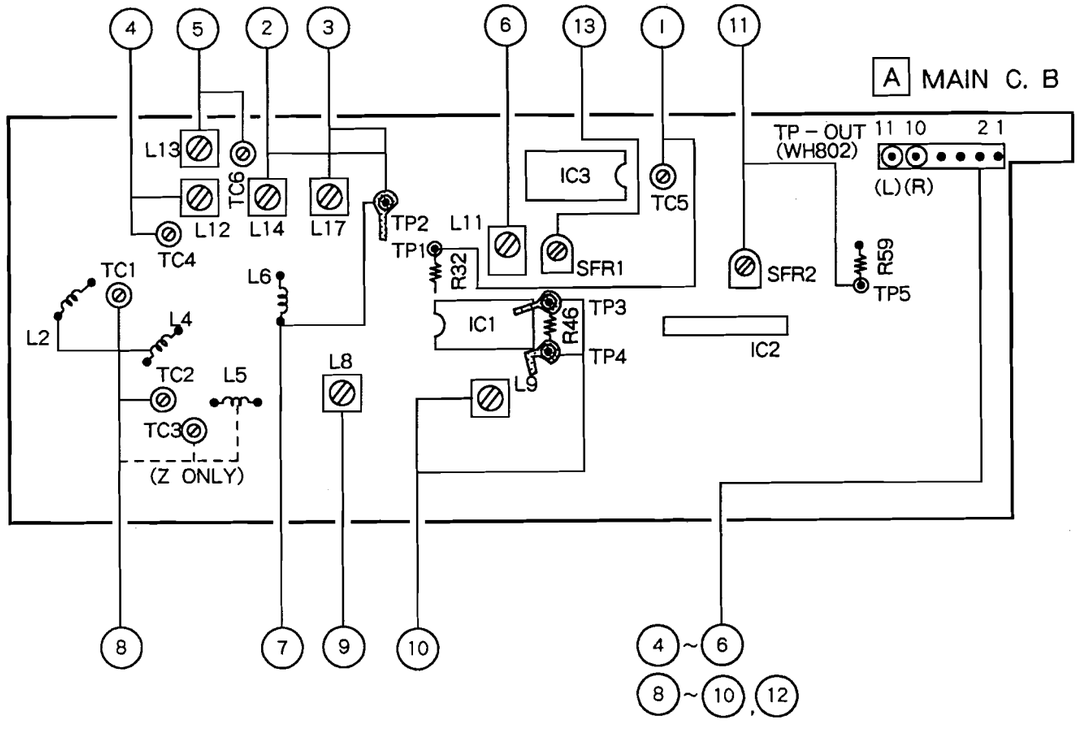

1. Clock Frequency Adjustment
   Settings ; • Test point : TP1
   • Adjustment location : TC5
   Method : Set to MW 1611kHz and adjust so that the test point becomes 2061kHz ± 0.01kHz

2. MW VT Adjustment
   Settings : • Test point : TP2 (VT)
   • Adjustment location : L14
   Method : Set to MW 522kHz and adjust L14 so that the test point becomes 1.0V ± 0.05V

3. LW VT Ajdustment
   Settings : • Test point : TP2 (VT)
   • Adjustment location : L17
   Method : Set to LW 144kHz and adjust L17 so that the test point becomes 1.5V ± 0.05V.

4. MW Tracking Adjustment
   Settings : • Test point : TP – OUT (WH802)
   L12 ····· 603kHz
   TC4 ····· 1,404kHz

5. LW Tracking Adjustment
   Settings : • Test point : TP – OUT (WH802)
   L13 ····· 144kHz
   TC6 ····· 290kHz

6. AM IF Adjustment
   Settings : • Test point : TP – OUT (WH802)
   L11 ····· 450kHz

7. FM VT Adjustment
   Settings : • Test point : TP2 (VT)
   • Adjustment location : L6
   Method : Set to FM 108.0MHz and adjust L6 so that the test point becomes 9.0V ± 0.05V.

8. FM Tracking Adjustment
   Settings : • Test pooint : TP – OUT (WH802)
   L2,4 ····· 87.5MHz (E,K)
   L2.4,5 ····· 87.5MHz (Z)
   TC1,2 ····· 108.0MHz (E,K)
   TC1,2,3 ····· 108.0MHz (Z)

9. FM IF Adjustment
   Settings : • Test point : TP – OUT (WH802)
   L8 ····· 10.7MHz

10. DC Balance Adjustment
    Settings : • Test point : TP3,4
    TP – OUT (WH802) (Distortion)
    • Adjustment location : L9
    Method : Set to FM 98.0MHz and adjust L9 so that TP3 and TP4 output becomes 0V ± 0.02V.
    Next, check so that the distortion becomes less than 0.6 %

11. MPX VCO Adjustment
    Settings : • Test point : TP5
    • MODE SW : STEREO
    • Adjustment location : SFR2
    Method : Connect a capacitor and resitor as below. Set to FM 98.0MHz non modulation and adjust so that the frequency at test point becomes 38kHz ± 0.05kHz.

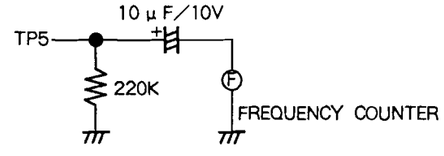

12. Separation Check
    Settings : • Test point : TP – OUT (WH802)
    Method : Set to FM 98.0MHz and check the separation at TP – OUT becomes more than 27dB.

13. Light on tunning LED Adjustment
    Settings : • Adjustment location : SFR1
    • Input level : 18dB
    Method : Set to FM 98.0MHz and adjust TUNNING LED to light on by SFR1. After that, LED goes out by 2dB down.

PRACTICAL SERVICE FIGURE (TX – Z92)

< FM SECTION >

Usable Sensitivity :	4 ± 4dB (at 87.5MHz) (E,K)
(THD 3%)	8 ± 4dB (at 87.5MHz) (Z)
	2 ± 4dB (at 98.0/108.0MHz) (E,K)
	6 ± 4dB (at 98.0/108.0MHz) (Z)
S/N 50dB Quieting Sensitivity :	
	Less than 34dB
	(at 87.5/98.0/108.0MHz) (E,K)
	Less than 38dB
	(at 87.5/98.0/108.0MHz) (Z)
Signal to Noise Ratio:	(MONO.)
	More than 72dB (at 98.0MHz) (E,K)
	More than 68dB (at 98.0MHz) (Z)
	(STEREO)
	More than 65dB (at 98.0MHz) (E,K)
	More than 60dB (at 98.0MHz) (Z)
Total Harmonic Distortion:	
	(MONO.)
	Less than 0.8 % (at 98.0MHz)
	(STEREO)
	Less than 1.5 % (at 98.0MHz)
Stereo Separation:	More than 27dB
Intermediate Frequency:	
	10.7MHz

< MW SECTION >

Sensitivity:	56 ± 4dB (at 603kHz)
(S/N 20dB)	52 ± 4dB (at 999/1404kHz)
Total Harmonic Distortion:	
	Less than 1.6 % (at 999kHz)
Intermediate Frequency:	
	450kHz

<LW SECTION>

Sensitivity:	63 ± 5dB (at 153kHz)
(S/N 20dB)	60 ± 5dB (at 198/290kHz)
Total Harmonic Distortion:	
	Less than 1.2 %
Intermediate Frequency:	
	450kHz

IC DESCRIPTION (TX – Z92)

IC,UPD75268CW – 029

Pin No.	Pin Name	I/O	Description
1~4	Sd~Sg	O	FL display segment signal outputs, key scan signal outputs. Active "H"
5	$\overline{PBK}$	I	Power failure detection input. When "L" level continues for 30 ms or more, a power failure is detected (the unit enters the backup mode). 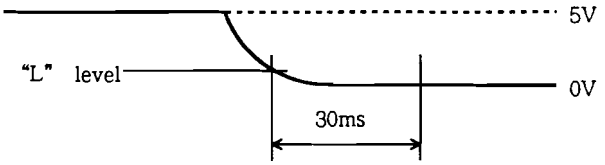
6	———	–	Not used (connected to ground).
7	AUTO – L	O	When an FM broadcast is received, this pin outputs a signal depending on the AUTO condition selected by the MODE key. Active "L" when the AUTO indicator lights. • Even if the AUTO indicator changes when the frequency is being set during timer programming, the output follows the condition currently received.
8	———	–	Not used (connected to ground).
9	REMOCON	I	Serial data input for remote control. Active "H" (the rise is detected).
10	———	–	Not used (connected to ground).
11	———	–	Not used (connected to ground).
12	POW SW	I/O	Power control input port. The power is turned on and off a alternately each time the power switch of the amplifier is pressed.
13	B0	I	These input pins select the frequency range, etc. with the 3 bits depending on the destination of the units.
14	B2		
15	B1		
16	$\overline{SD}$	I	Input to stop auto scanning. Active "L". • The input is not accepted during power off. • The input cause "TUNE" to light. • Searches for SD signals every 5 ms during auto scanning. When 4 "L" pulses are conuted, sacnning will stop. • SD is not detected during manual tuning.
17	$\overline{STEREO}$	I	Input which causes the $\overline{STEREO}$ indicator to light. Active "L". • This input is not accepted during power off.
18	$\overline{K \cdot MUTE}$	O	Outputs a muting signal when a key is operated.
19	$\overline{SER\ I/O}$	I/O	8 – bit serial data input/output.
20	T – BASE	I	Receives 8Hz pulses from the PLL (LC7218) as a clock signal timing.
21~24	KO~K3	I	Key matrix inputs (K2 and K3 are not used and connected to ground).
25	TEST1	I	Test mode setting inputs.
26	TEST2		
27	TEST3		
28	AC CLK	I	Receives the commercial power frequency (the AC level is 5V) as a reference signal for the clock. Not used (connected to ground).
29	———	–	Not used (not connected).
30	X1	–	A ceramic oscillator which generates the main system clock signal (4.19MHz) is connected.
31	X2		
32	GND	–	Ground pin.
33	XT1	–	Not used (connected to ground).
34	XT2		Not used (not connected).
35	POW ON	–	Not used (not connected). Goes "H"during power on and "L"during power off.
36	CE	O	Output ports which transmit serial data to the PLL (IC7218). Active "H".
37	DATA		
38	CLK		
39	$\overline{RESET}$	I	System reset input. When the TUNER MODE and BAND switches are pressed and held for 1 second, the clock and preset stations are reset.

Pin No.	Pin Name	I/O	Description
40~48	D1~D9	O	FL display digit outputs.
49	———	–	Not used (not connected).
50	Sn	O	FL display segment outputs.
51	Sm		
52	Sℓ		
53	Sk		
54	———	–	Not used (not connected).
55	———		
56	V LOAD	I	Supplies power (– 25V) to the output buffer of the FL display driver.
57	V PRE	I	Connected to ground.
58	Sj	O	FL display segment outputs.
59	Si		
60	Sh		
61	Sa		
62	Sb		
63	Sc		
64	VDD	–	+5V power terminal.

IC,LC7218

Pin No.	Pin Name	I/O	Description
1 24	X IN X OUT	–	Clock oscillator connection pins. A 7.2MHz crystal oscillator is connected.
2 3 4	CE DATA CLK	I	When a key is operated, signals are transferred from the CPU. Active "H".
5 ≀ 8	———	–	Unused (Not connected).
9	T – BASE	O	Outputs an 8Hz signal. Transfers it to the CPU as a time base clock signal.
10	———	–	Unused (Not connected).
11	———	O	Unused (Not connected).
12	AUTO – H	–	Outputs "H" when FM stereo switching is set to AUTO.
13	MW (AM) – L	O	Outputs "L" when an MW (AM) broadcast is received.
14 15 16	———	–	Unused (Not connected).
17	FM – L	O	Outputs "L" when an FM broadcast is received.
18	AM – IN	I	AM local oscillation input.
19	FM – IN	I	FM local oscillation input.
20	VDD	–	Power supply pin. 5V ± 10%
21	EO_1	O	PLL error output.
22	EO_2	–	Unused (Not connected).
23	VSS	–	Ground pin.

C FRONT C.B

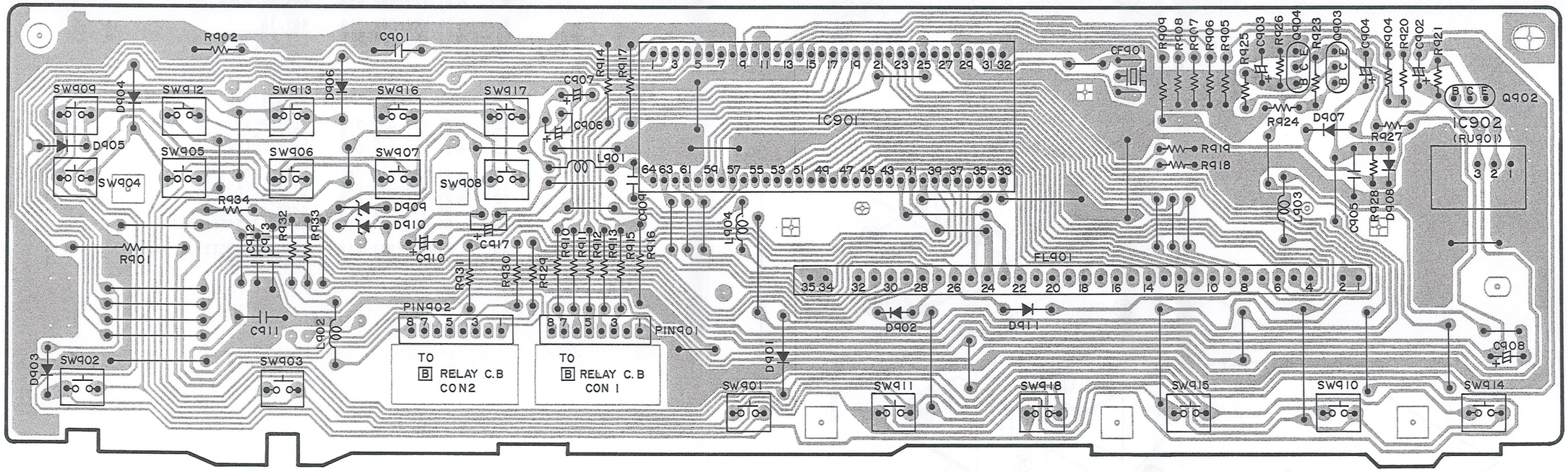

SW902 ^ UP — TUNING/TIMER — SW903 v DOWN

SW901 BAND | SW911 ST/MONO | SW918 SLEEP | SW915 STANDBY | SW910 SET | SW914 CLOCK/TIMER

GRAPHIC SYMBOLS PRINTED CIRCUIT BOARD OF ELECT. CAP. ARE DESIGNED AS NEGATIVE POLE.

(プリント基板内のケミコンの極性表示はθ表示です。)

D POWER C.B

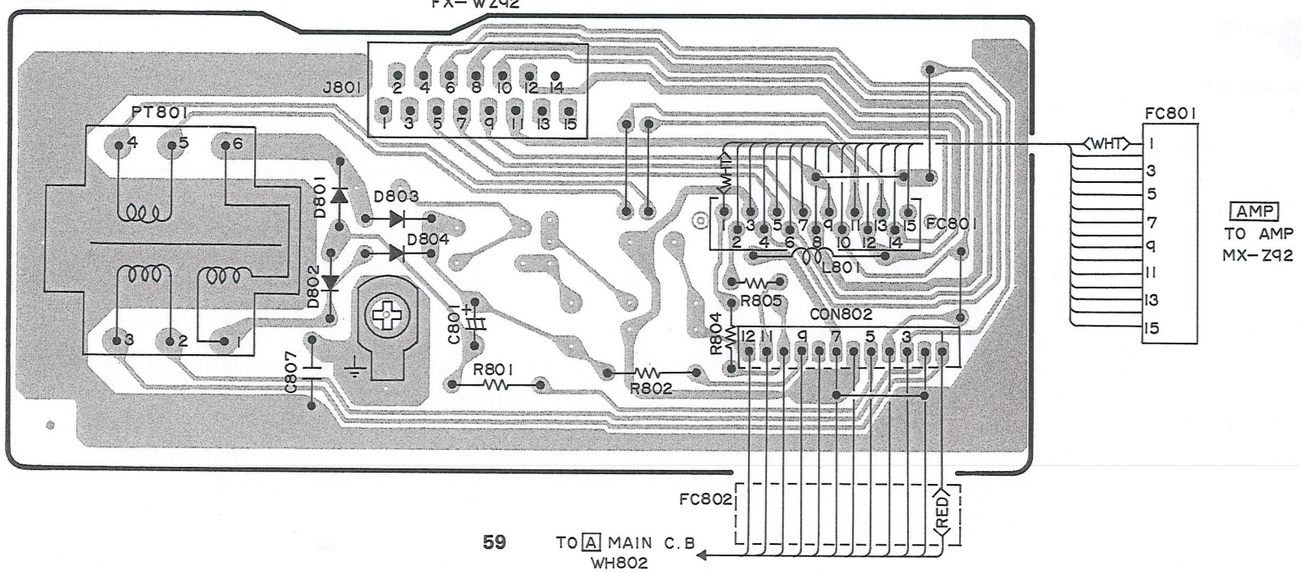

EXPLODED VIEW (TX – Z92)

REF.NO.	PART NO.	DESCRIPTION
A	87-067-660-019	BVT$_2$+3-8 W/O STOL (B)
B	87-067-632-019	BVT$_2$+3-15 W.CONVEX
C	87-067-641-019	UTT$_2$+3-8 (B)

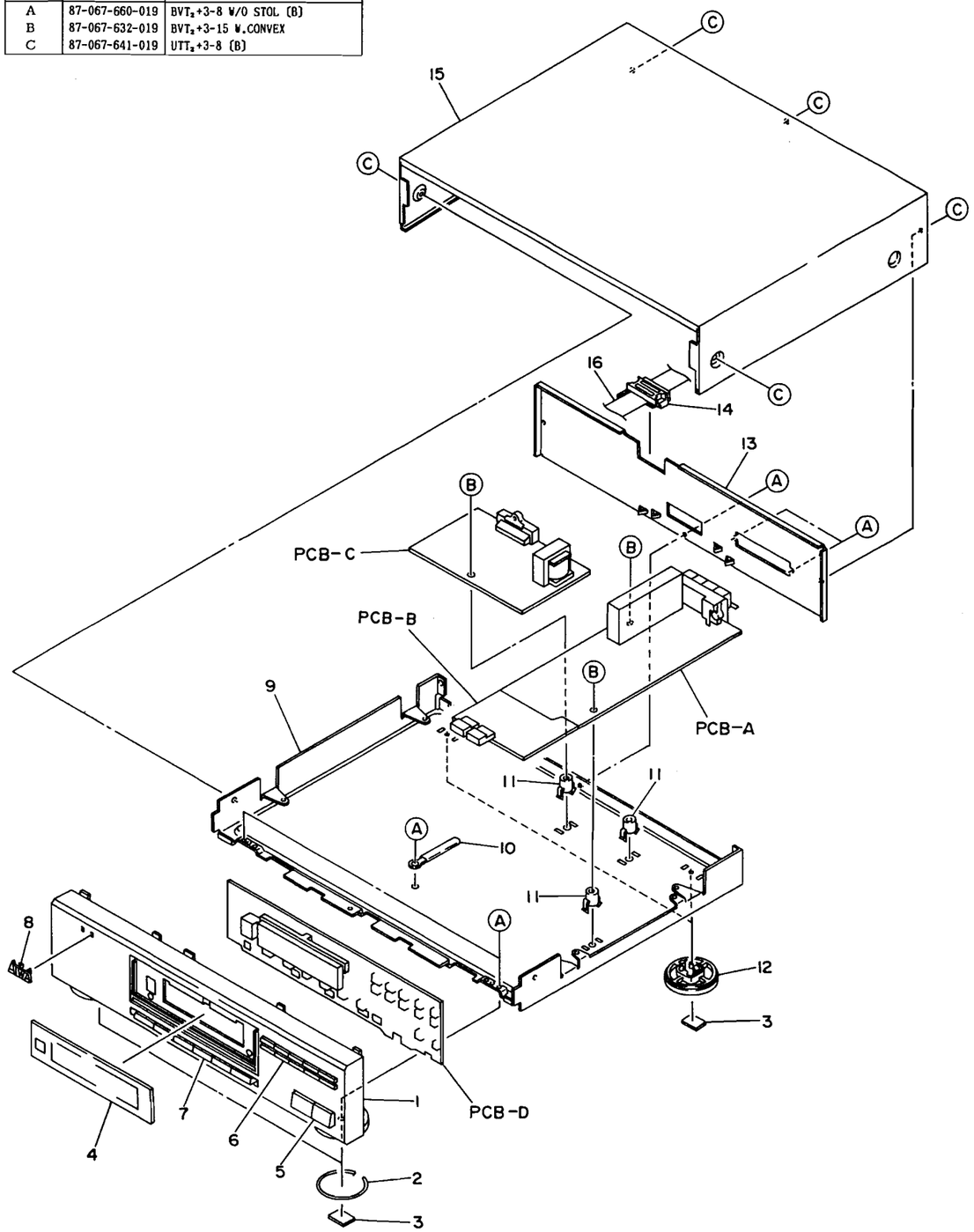

MECHANICAL PARTS LIST (TX – Z92)

PART NO. CHANGED TO	REF. NO.	PART NO.	DESCRIPTION	COMMON MODEL	Q. TY
	1	★81-VT1-001-019	CABINET, FRONT	*	1
	2	★81-VW1-015-010	RING, FO'OT		2
	3	★81-VW1-201-019	FELT, 20-15-2		4
	4	★81-VT1-006-019	WINDOW, TUNER	*	1
	5	★81-VT1-005-019	KEY, UP/DOWN	*	1
	6	★81-VT1-004-019	KEY, 10	*	1
	7	★81-VT1-003-019	KEY, PRESET	*	1
	8	★81-MK1-006-019	BADGE, AIWA		1
	9	---	CHASSIS, AMP(YH)		1
	9	---	CHASSIS, GE(YE, YK, YZ)		1
	10	---	WIRE, BINDER		1
	11	---	HOLDER, PCB		3
	12	★81-VX1-012-019	FOOT, REAR		2
	13	★81-VT1-010-019	PANEL, REAR(YH)	*	1
	13	★81-VT1-014-019	PANEL, REAR(YHJ)	*	1
	13	★81-VT1-012-019	PANEL, REAR(YK)	*	1
	13	★81-VT1-015-019	PANEL, REAR(YE)	*	1
	13	★81-VT1-013-019	PANEL, REAR(YZ)	*	1
	14	89-VT5-202-010	CORD, BUSHING		1
	15	81-666-015-110	CABINET, STEEL(YH)		1
	15	81-VU1-021-018	CABINET, STEEL(YE, YK, YZ)		1
	16	81-VP1-605-010	CORD, FG 15P		1

MODEL NO.

GE – Z92

CAUTIONS WHEN SERVICING (GE – Z92)

The GE – Z92 does not have a power circuit. Through a 11 – pin flat cable, power is supplied to the GE – Z92 and also signals are input and output to/from it. When servicing the GE – Z92, connect it to the MX – Z92M amplifier.

If the amplifier is not available, follow the procedure below.

[When servicing the unassembled GE – Z92]

1 Supply the following voltages to each terminal from an external power supply.

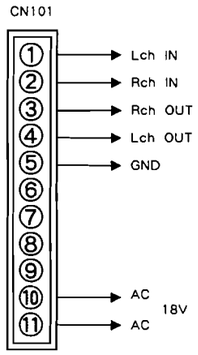

2 When using a multi power unit (LPS – 9088)

• Set the multi power unit as shown in Figure – 1 and connect the multi conversion harness to J1 to supply power.

Connection diagram of conversion harness

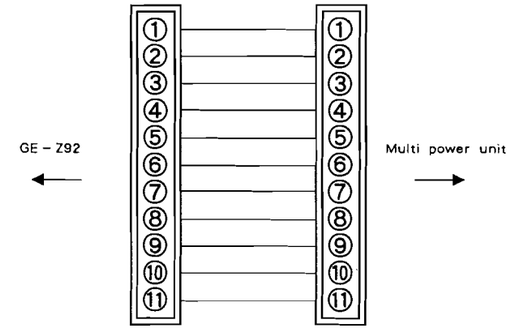

※ After wiring, press the GEQ ON/OFF button on the GE – Z92 and hold it, then press the POWER button of a multi power supply to turn the power on. Hold the POWER button for approx. 1 second until the display lights.

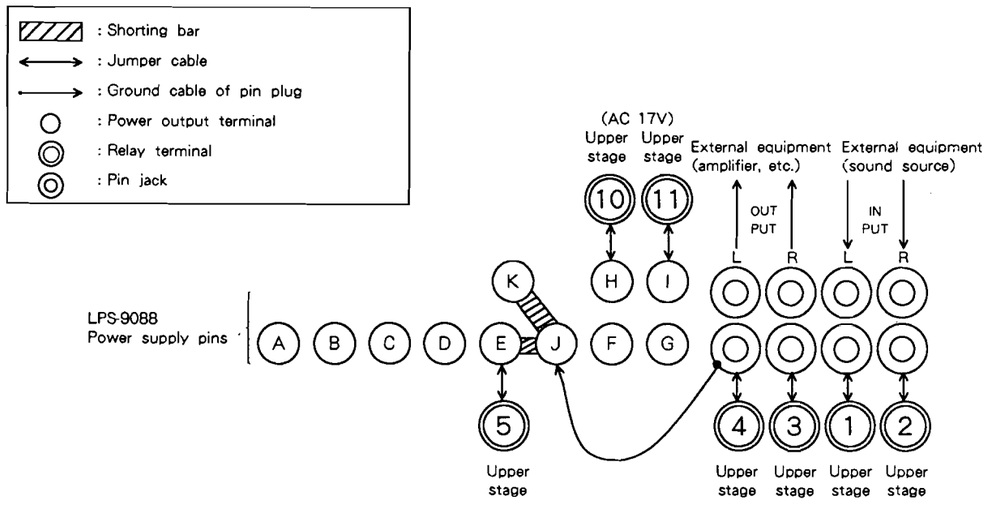

Fig – 1

ELECTRICAL MAIN PARTS LIST (GE – Z92)

REF. NO.	PART NO.	DESCRIPTION
::: IC :::		
	87-001-530-019	IC, LA3607
	81-VU1-605-010	IC, LC6554H-4675
	87-002-429-010	IC, NJU7305L
	87-027-958-019	IC, TC4051BP
	87-001-869-010	IC, XR-1091
::: TRANSISTOR :::		
	87-026-463-019	TRANSISTOR, 2SA933S (RS)
	89-109-521-019	TRANSISTOR, 2SA952K
	89-113-188-019	TRANSISTOR, 2SA1318 U
	87-026-462-019	TRANSISTOR, 2SC1740S (RS)
	89-320-011-019	TRANSISTOR, 2SC2001K
	87-026-269-019	TRANSISTOR, DTA114ES
::: DIODE :::		
	87-020-465-019	DIODE 1SS133
	87-027-365-019	DIODE S5277B
	87-001-909-019	DIODE, ZENER UTZJ 24B
	87-001-911-019	DIODE, ZENER UTZJ 4.7A
	87-002-430-019	DIODE, ZENER UTZJ8.2C
::: MAIN CIRCUIT BOARD SECTION :::		
C101	★87-010-404-019	CAP, ELECT 4.7-50 SME
C102	★87-010-404-019	CAP, ELECT 4.7-50 SME
C103	★87-010-404-019	CAP, ELECT 4.7-50 SME
C104	★87-010-404-019	CAP, ELECT 4.7-50 SME
C105	★87-010-404-019	CAP, ELECT 4.7-50 SME
C106	★87-010-404-019	CAP, ELECT 4.7-50 SME
C107	★87-018-127-019	CAP, CERA-SOL SS 470P-50 B
C108	★87-018-127-019	CAP, CERA-SOL SS 470P-50 B
C111	★87-010-402-019	CAP, ELECT 2.2-50 SME
C112	★87-010-402-019	CAP, ELECT 2.2-50 SME
C115	★87-010-400-019	CAP, ELECT 0.47-50 SME
C116	★87-010-400-019	CAP, ELECT 0.47-50 SME
C119	★87-010-545-019	CAP, ELECT 0.22-50 SME
C120	★87-010-545-019	CAP, ELECT 0.22-50 SME
C121	★87-018-201-019	CAP, CERA-SOL SS 5600P-16 X
C122	★87-018-201-019	CAP, CERA-SOL SS 5600P-16 X
C125	★87-018-132-019	CAP, CERA-SOL SS 2200P-16 X
C126	★87-018-132-019	CAP, CERA-SOL SS 2200P-16 X
C129	★87-018-129-019	CAP, CERA-SOL SS 680P-50 B
C130	★87-018-129-019	CAP, CERA-SOL SS 680P-50 B
C133	★87-018-125-019	CAP, CERA-SOL SS 330P-50 B
C134	★87-018-125-019	CAP, CERA-SOL SS 330P-50 B
C135	★87-018-133-019	CAP, CERA-SOL SS 4700P-16 X
C136	★87-018-133-019	CAP, CERA-SOL SS 4700P-16 X
C138	★87-018-134-019	CAP, CERA-SOL SS 0.01-16 Y
C139	★87-018-134-019	CAP, CERA-SOL SS 0.01-16 Y
C140	★87-018-131-019	CAP, CERA-SOL SS 1000P-50 B
C141	★87-018-127-019	CAP, CERA-SOL SS 470P-50 B
C142	★87-010-404-019	CAP, ELECT 4.7-50 SME
C143	★87-010-404-019	CAP, ELECT 4.7-50 SME
C144	★87-018-123-019	CAP, CERA-SOL SS 220P-50 B(E, Z)
C145	★87-018-123-019	CAP, CERA-SOL SS 220P-50 B(E, Z)
C146	★87-018-214-019	CAP, CERA-SOL SS 0.1-50 F(E, Z)
C147	★87-018-133-019	CAP, CERA-SOL SS 4700P-16 X(E, Z)
C201	★87-010-387-019	CAP, ELECT 470-25V
C202	★87-010-387-019	CAP, ELECT 470-25V
C203	★87-010-263-019	CAP, ELECT 100-10
C204	★87-010-263-019	CAP, ELECT 100-10
C205	★87-010-263-019	CAP, ELECT 100-10
C206	★87-010-263-019	CAP, ELECT 100-10
C208	★87-010-408-019	CAP, ELECT 47-50 SME
C209	★87-010-408-019	CAP, ELECT 47-50 SME
C210	★87-010-247-019	CAP, ELECT 100-50 SME
C211	★87-010-263-019	CAP, ELECT 100-10
PT201	87-VU1-601-019	POWER TRANSFORMER, PS 1VU-1
::: FRONT CIRCUIT BOARD SECTION :::		
C301	★87-018-195-019	CAP, CERA-SOL SS 1200P-16 X
C302	★87-018-195-019	CAP, CERA-SOL SS 1200P-16 X
C303	★87-018-121-019	CAP, CERA-SOL SS 150P-50 B
C305	★87-018-131-019	CAP, CERA-SOL SS 1000P-50 B
C306	★87-018-131-019	CAP, CERA-SOL SS 1000P-50 B
C307	★87-018-208-019	CAP, CERA-SOL SS 0.047-50 F
C308	★87-010-370-019	CAP, ELECT 330-6.3 SME
C309	★87-010-498-019	CAP, ELECT 10-16 5L
C310	★87-010-497-019	CAP, ELECT 4.7-35 5L
C311	★87-010-405-019	CAP, ELECT 10-50 SME
C312	★87-010-405-019	CAP, ELECT 10-50 SME
C313	★87-010-251-019	CAP, ELECT 10-35 SRE
C314	★87-010-264-019	CAP, ELECT 100-10 5L
C315	★87-010-264-019	CAP, ELECT 100-10 5L
CF301	★89-MX1-704-019	FILTER, CERAMIC(MU) 3.9MHz
FL301	★89-VP5-626-010	FL, BG-762GK(GEQ)
FL302	★89-VP5-626-010	FL, BG-762GK(GEQ)
LED301	87-020-862-010	LED, SEL-2213C(EQ ON)
LED302	87-020-862-010	LED, SEL-2213C(PROGRAM)
LED303	87-020-862-010	LED, SEL-2213C(MANUAL)
LED304	87-020-862-010	LED, SEL-2213C(1/ROCK)
LED305	87-020-862-010	LED, SEL-2213C(2/POPS)
LED306	87-020-862-010	LED, SEL-2213C(3/CLASSIC)
LED307	87-020-862-010	LED, SEL-2213C(4/HS)
LED308	87-020-862-010	LED, SEL-2213C(5/CAR)
S301	87-036-142-019	TACT SW EVQ-11404M(4)
S302	87-036-142-019	TACT SW EVQ-11404M(HS)
S303	87-036-142-019	TACT SW EVQ-11404M(5)
S304	87-036-142-019	TACT SW EVQ-11404M(CAR)
S305	87-036-142-019	TACT SW EVQ-11404M(3)
S306	87-036-142-019	TACT SW EVQ-11404M(CLASSIC)
S307	87-036-142-019	TACT SW EVQ-11404M(2)
S308	87-036-142-019	TACT SW EVQ-11404M(POPS)
S309	87-036-142-019	TACT SW EVQ-11404M(1)
S310	87-036-142-019	TACT SW EVQ-11404M(ROCK)
S311	87-036-142-019	TACT SW EVQ-11404M(15kHz ▲)
S312	87-036-142-019	TACT SW EVQ-11404M(15kHz ▼)
S313	87-036-142-019	TACT SW EVQ-11404M(6kHz ▲)
S314	87-036-142-019	TACT SW EVQ-11404M(6kHz ▼)
S315	87-036-142-019	TACT SW EVQ-11404M(2.5kHz ▲)
S316	87-036-142-019	TACT SW EVQ-11404M(2.5kHz ▼)
S317	87-036-142-019	TACT SW EVQ-11404M(1kHz ▲)
S318	87-036-142-019	TACT SW EVQ-11404M(1kHz ▼)
S319	87-036-142-019	TACT SW EVQ-11404M(350Hz ▲)
S320	87-036-142-019	TACT SW EVQ-11404M(350Hz ▼)
S321	87-036-142-019	TACT SW EVQ-11404M(150Hz ▲)
S322	87-036-142-019	TACT SW EVQ-11404M(150Hz ▼)
S323	87-036-142-019	TACT SW EVQ-11404M(60Hz ▲)
S324	87-036-142-019	TACT SW EVQ-11404M(60Hz ▼)
S325	87-036-142-019	TACT SW EVQ-11404M(MEMORY)
S326	87-036-142-019	TACT SW EVQ-11404M(DISPLAY)
S327	87-036-142-019	TACT SW EVQ-11404M(FLAT)
S328	87-036-142-019	TACT SW EVQ-11404M(GEQ ON/OFF)

IC DES

IC,NJU7

Pin No.
1
18
14
15
2, 27
3, 26
4~10
19~25
11
12
13
16
17
28

IC,LC65

Pin No.
1~9
10~13
14
15~17
18~22
23
24
25
26
27
28
29
30
31
32
33
34
35
36
37
38
39
40
41
42
43~50
51
52~63
64

ELECTRICAL MAIN PARTS LIST (GE－Z92)

REF. NO.	PART NO.	DESCRIPTION
=== IC ===		
	87-001-530-019	IC, LA3607
	81-VU1-605-010	IC, LC6554H-4675
	87-002-429-010	IC, NJU7305L
	87-027-958-019	IC, TC4051BP
	87-001-869-010	IC, XR-1091
=== TRANSISTOR ===		
	87-026-463-019	TRANSISTOR, 2SA933S (RS)
	89-109-521-019	TRANSISTOR, 2SA952K
	89-113-188-019	TRANSISTOR, 2SA1318 U
	87-026-462-019	TRANSISTOR, 2SC1740S (RS)
	89-320-011-019	TRANSISTOR, 2SC2001K
	87-026-269-019	TRANSISTOR, DTA114ES
=== DIODE ===		
	87-020-465-019	DIODE 1SS133
	87-027-365-019	DIODE S5277B
	87-001-909-019	DIODE, ZENER UTZJ 24B
	87-001-911-019	DIODE, ZENER UTZJ 4.7A
	87-002-430-019	DIODE, ZENER UTZJ8.2C
=== MAIN CIRCUIT BOARD SECTION ===		
C101	★87-010-404-019	CAP, ELECT 4.7-50 SME
C102	★87-010-404-019	CAP, ELECT 4.7-50 SME
C103	★87-010-404-019	CAP, ELECT 4.7-50 SME
C104	★87-010-404-019	CAP, ELECT 4.7-50 SME
C105	★87-010-404-019	CAP, ELECT 4.7-50 SME
C106	★87-010-404-019	CAP, ELECT 4.7-50 SME
C107	★87-018-127-019	CAP, CERA-SOL SS 470P-50 B
C108	★87-018-127-019	CAP, CERA-SOL SS 470P-50 B
C111	★87-010-402-019	CAP, ELECT 2.2-50 SME
C112	★87-010-402-019	CAP, ELECT 2.2-50 SME
C115	★87-010-400-019	CAP, ELECT 0.47-50 SME
C116	★87-010-400-019	CAP, ELECT 0.47-50 SME
C119	★87-010-545-019	CAP, ELECT 0.22-50 SME
C120	★87-010-545-019	CAP, ELECT 0.22-50 SME
C121	★87-018-201-019	CAP, CERA-SOL SS 5600P-16 X
C122	★87-018-201-019	CAP, CERA-SOL SS 5600P-16 X
C125	★87-018-132-019	CAP, CERA-SOL SS 2200P-16 X
C126	★87-018-132-019	CAP, CERA-SOL SS 2200P-16 X
C129	★87-018-129-019	CAP, CERA-SOL SS 680P-50 B
C130	★87-018-129-019	CAP, CERA-SOL SS 680P-50 B
C133	★87-018-125-019	CAP, CERA-SOL SS 330P-50 B
C134	★87-018-125-019	CAP, CERA-SOL SS 330P-50 B
C135	★87-018-133-019	CAP, CERA-SOL SS 4700P-16 X
C136	★87-018-133-019	CAP, CERA-SOL SS 4700P-16 X
C138	★87-018-134-019	CAP, CERA-SOL SS 0.01-16 Y
C139	★87-018-134-019	CAP, CERA-SOL SS 0.01-16 Y
C140	★87-018-131-019	CAP, CERA-SOL SS 1000P-50 B
C141	★87-018-127-019	CAP, CERA-SOL SS 470P-50 B
C142	★87-010-404-019	CAP, ELECT 4.7-50 SME
C143	★87-010-404-019	CAP, ELECT 4.7-50 SME
C144	★87-018-123-019	CAP, CERA-SOL SS 220P-50 B(E, Z)
C145	★87-018-123-019	CAP, CERA-SOL SS 220P-50 B(E, Z)
C146	★87-018-214-019	CAP, CERA-SOL SS 0.1-50 F(E, Z)
C147	★87-018-133-019	CAP, CERA-SOL SS 4700P-16 X(E, Z)
C201	★87-010-387-019	CAP, ELECT 470-25V
C202	★87-010-387-019	CAP, ELECT 470-25V
C203	★87-010-263-019	CAP, ELECT 100-10
C204	★87-010-263-019	CAP, ELECT 100-10
C205	★87-010-263-019	CAP, ELECT 100-10
C206	★87-010-263-019	CAP, ELECT 100-10
C208	★87-010-408-019	CAP, ELECT 47-50 SME
C209	★87-010-408-019	CAP, ELECT 47-50 SME
C210	★87-010-247-019	CAP, ELECT 100-50 SME
C211	★87-010-263-019	CAP, ELECT 100-10
PT201	87-VU1-601-019	POWER TRANSFORMER, PS 1VU-1
=== FRONT CIRCUIT BOARD SECTION ===		
C301	★87-018-195-019	CAP, CERA-SOL SS 1200P-16 X
C302	★87-018-195-019	CAP, CERA-SOL SS 1200P-16 X
C303	★87-018-121-019	CAP, CERA-SOL SS 150P-50 B
C305	★87-018-131-019	CAP, CERA-SOL SS 1000P-50 B
C306	★87-018-131-019	CAP, CERA-SOL SS 1000P-50 B
C307	★87-018-208-019	CAP, CERA-SOL SS 0.047-50 F
C308	★87-010-370-019	CAP, ELECT 330-6.3 SME
C309	★87-010-498-019	CAP, ELECT 10-16 5L
C310	★87-010-497-019	CAP, ELECT 4.7-35 5L
C311	★87-010-405-019	CAP, ELECT 10-50 SME
C312	★87-010-405-019	CAP, ELECT 10-50 SME
C313	★87-010-251-019	CAP, ELECT 10-35 SRE
C314	★87-010-264-019	CAP, ELECT 100-10 5L
C315	★87-010-264-019	CAP, ELECT 100-10 5L
CF301	★89-MX1-704-019	FILTER, CERAMIC(MU) 3.9MHz
FL301	★89-VP5-626-010	FL, BG-762GK(GEQ)
FL302	★89-VP5-626-010	FL, BG-762GK(GEQ)
LED301	87-020-862-010	LED, SEL-2213C(EQ ON)
LED302	87-020-862-010	LED, SEL-2213C(PROGRAM)
LED303	87-020-862-010	LED, SEL-2213C(MANUAL)
LED304	87-020-862-010	LED, SEL-2213C(1/ROCK)
LED305	87-020-862-010	LED, SEL-2213C(2/POPS)
LED306	87-020-862-010	LED, SEL-2213C(3/CLASSIC)
LED307	87-020-862-010	LED, SEL-2213C(4/HS)
LED308	87-020-862-010	LED, SEL-2213C(5/CAR)
S301	87-036-142-019	TACT SW EVQ-11404M(4)
S302	87-036-142-019	TACT SW EVQ-11404M(HS)
S303	87-036-142-019	TACT SW EVQ-11404M(5)
S304	87-036-142-019	TACT SW EVQ-11404M(CAR)
S305	87-036-142-019	TACT SW EVQ-11404M(3)
S306	87-036-142-019	TACT SW EVQ-11404M(CLASSIC)
S307	87-036-142-019	TACT SW EVQ-11404M(2)
S308	87-036-142-019	TACT SW EVQ-11404M(POPS)
S309	87-036-142-019	TACT SW EVQ-11404M(1)
S310	87-036-142-019	TACT SW EVQ-11404M(ROCK)
S311	87-036-142-019	TACT SW EVQ-11404M(15kHz ▲)
S312	87-036-142-019	TACT SW EVQ-11404M(15kHz ▼)
S313	87-036-142-019	TACT SW EVQ-11404M(6kHz ▲)
S314	87-036-142-019	TACT SW EVQ-11404M(6kHz ▼)
S315	87-036-142-019	TACT SW EVQ-11404M(2.5kHz ▲)
S316	87-036-142-019	TACT SW EVQ-11404M(2.5kHz ▼)
S317	87-036-142-019	TACT SW EVQ-11404M(1kHz ▲)
S318	87-036-142-019	TACT SW EVQ-11404M(1kHz ▼)
S319	87-036-142-019	TACT SW EVQ-11404M(350Hz ▲)
S320	87-036-142-019	TACT SW EVQ-11404M(350Hz ▼)
S321	87-036-142-019	TACT SW EVQ-11404M(150Hz ▲)
S322	87-036-142-019	TACT SW EVQ-11404M(150Hz ▼)
S323	87-036-142-019	TACT SW EVQ-11404M(60Hz ▲)
S324	87-036-142-019	TACT SW EVQ-11404M(60Hz ▼)
S325	87-036-142-019	TACT SW EVQ-11404M(MEMORY)
S326	87-036-142-019	TACT SW EVQ-11404M(DISPLAY)
S327	87-036-142-019	TACT SW EVQ-11404M(FLAT)
S328	87-036-142-019	TACT SW EVQ-11404M(GEQ ON/OFF)

IC DESCRIPTION (GE－Z92)

IC,NJU7305L

Pin No.	Pin Name	I/O	Description
1	V_{DD}	I	Audio power supply pin. (+7.5V)
18	V_{SS}	－	GND (0V)
14	V_{EE}	I	Audio power supply pin. (－7.5V)
15	V_{CC}	I	Power supply pin. (+5.0V)
2, 27	IN_{1L}, IN_{1R}	I	Audio inputs. Connected to the inverting inputs of the operational amplifier.
3, 26	IN_{2L}, IN_{2R}		Audio inputs. Connected to the non-inverting inputs of the operational amplifier.
4～10	f_{L1}～f_{L7}	O	BPFs are connected. (14 pins on the L and R channels)
19～25	f_{R1}～f_{R7}		
11	TEST 1	－	Chip's inside test pin. Normally, connected to VDD.
12	TEST 2		
13	S	I	Chip select signal input from the CPU.
16	DI	I	Serial data input from the CPU.
17	CLK	I	Clock input from the CPU.
28	NC	－	Not used.

IC,LC6554H－4675

Pin No.	Pin Name	I/O	Description
1～9	1～t	O	FL display lighting segment outputs.
10～13	KEY－0～3	I	Key matrix inputs.
14	I－RMC	I	Remote signal input.
15～17	PB1～3	－	Unused.
18～22	$\overline{O-M1}$～$\overline{M5}$	O	Memory 1～5 LED lighting outputs. Goes "L" to light.
23	$\overline{O-PRGM}$	O	Program LED lighting output. Goes "L" to light.
24	$\overline{O-MANUAL}$	O	Manual LED lighting output. Goes "L" to light.
25	$\overline{O-EQON}$	O	Equalizer ON LED lighting output. Goes "L" to light.
26	O－DI	O	Electronic volume control signal output for graphic equalizer.
27	O－CLK	O	Electronic volume control clock output for graphic equalizer.
28	$\overline{I-SERIAL}$	I	Serial control input.
29	$\overline{O-POWER}$	O	Power control output for FL filament. Goes "L" to ON.
30	TEST	I	Test pin. Connected to VSS.
31	VSS	－	Connected to ground.
32	OSC－1	－	Clock oscillator pins.
33	OSC－2		
34	$\overline{RESET}$	I	Reset input.
35	$\overline{HOLD}$	I	Hold input.
36	O－A	O	Spectrum analyzer A/D input select control.
37	O－B		
38	O－C		

	60Hz	150Hz	350Hz	1kHz	2.5kHz	6kHz	15kHz	LEVEL
A	L	H	L	H	L	H	L	H
B	L	L	H	H	L	L	H	H
C	L	L	L	L	H	H	H	H

39	$\overline{I-A/D}$	I	A/D comparator input for spectrum analyzer.
40	$\overline{O-LCH}$	O	Spectrum analyzer A/D input select L ch control. Goes "L" to select.
41	$\overline{O-RCH}$	O	Spectrum analyzer A/D input select R ch control. Goes "L" to select.
42	11B	O	FL display lighting segment output.
43～50	$\overline{1G}$～$\overline{8G}$	O	FL display lighting grid outputs.
51	－VP	－	Bias voltage for FL. Connected to －24V.
52～63	a～u	O	FL display lighting segment outputs.
64	VDD	－	Power supply pin. +5.4V

BLOCK DIAGRAM (GE – Z92)

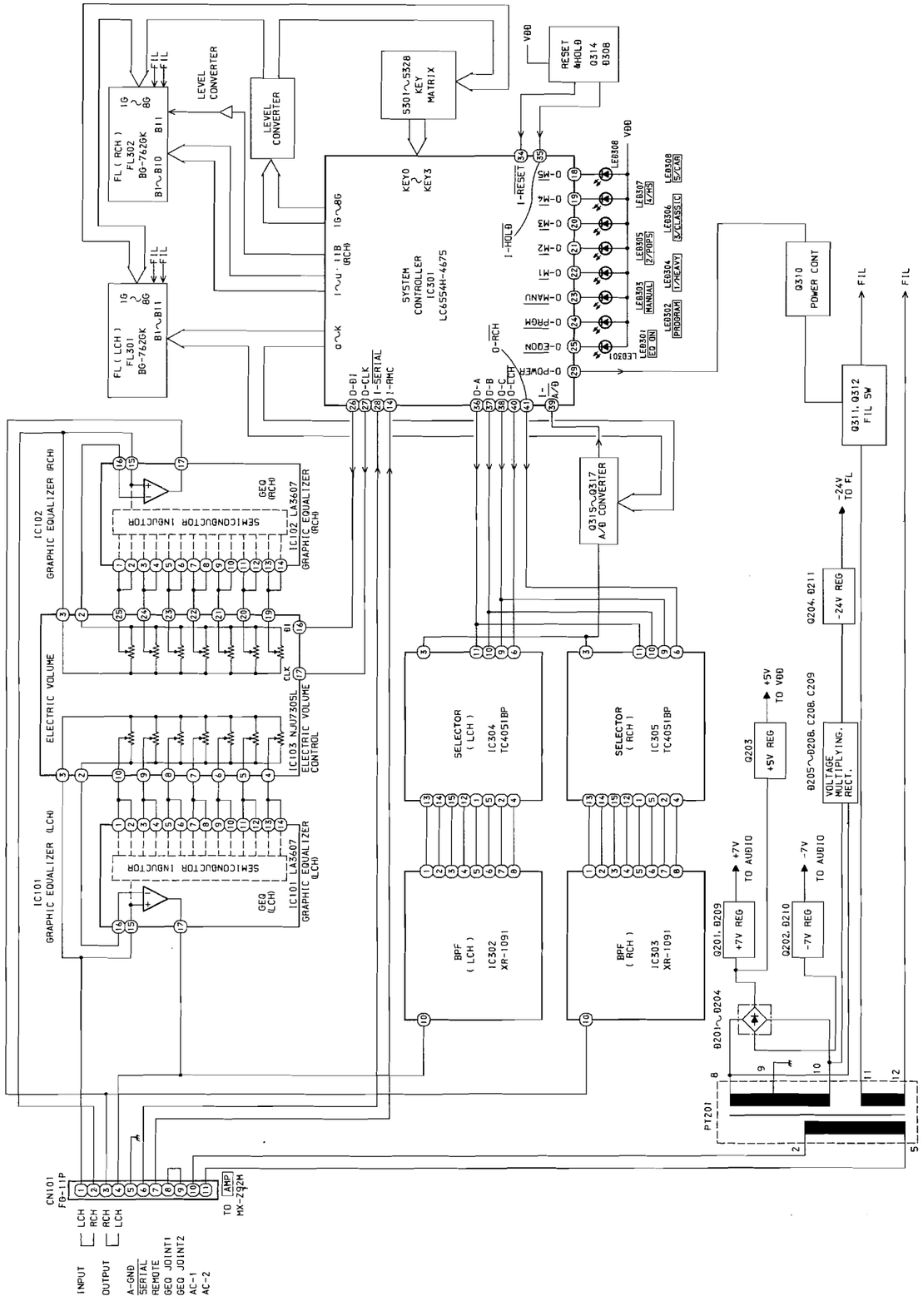

SCHEMATIC DIAGRAM (GE – Z92)

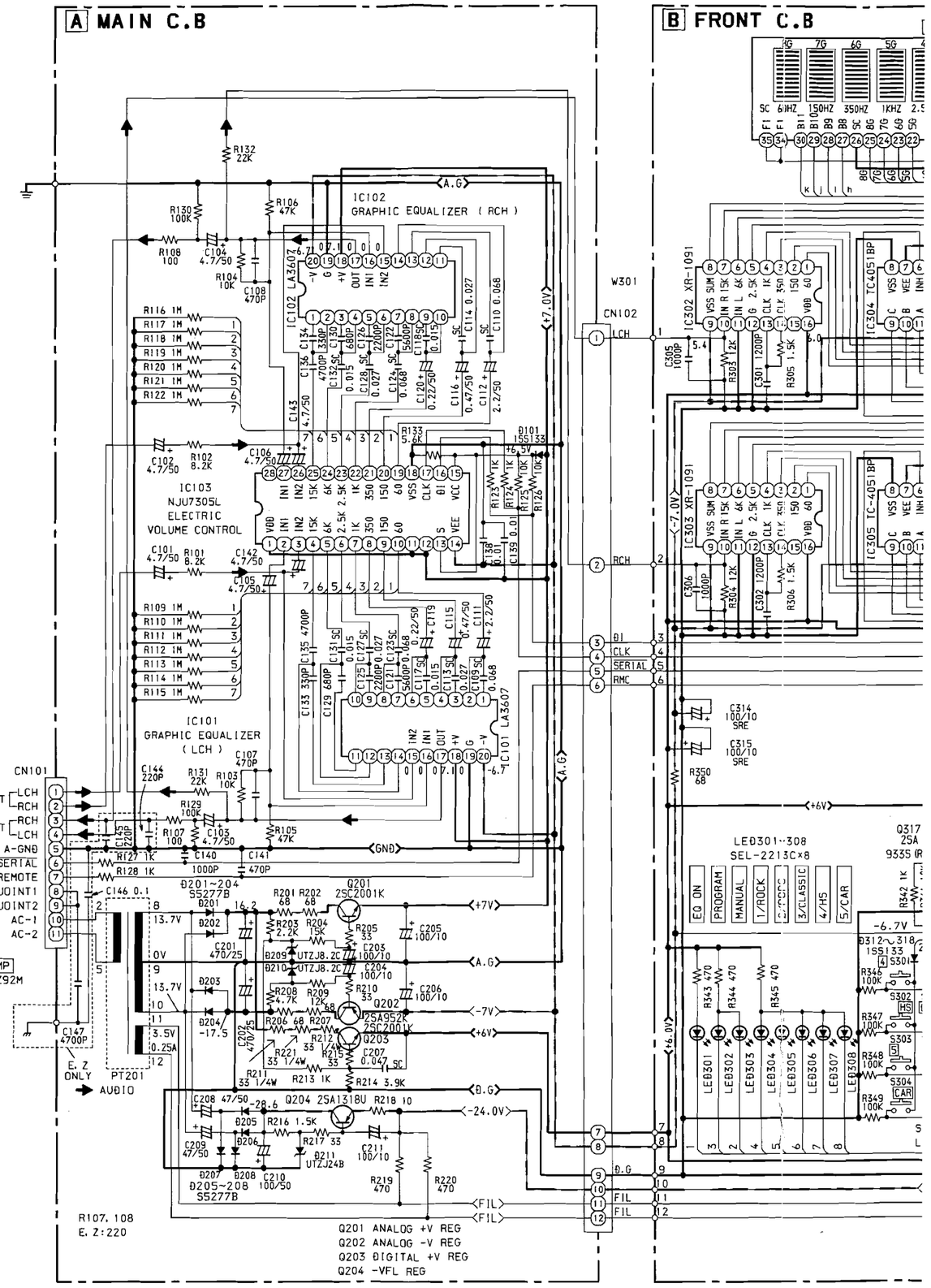

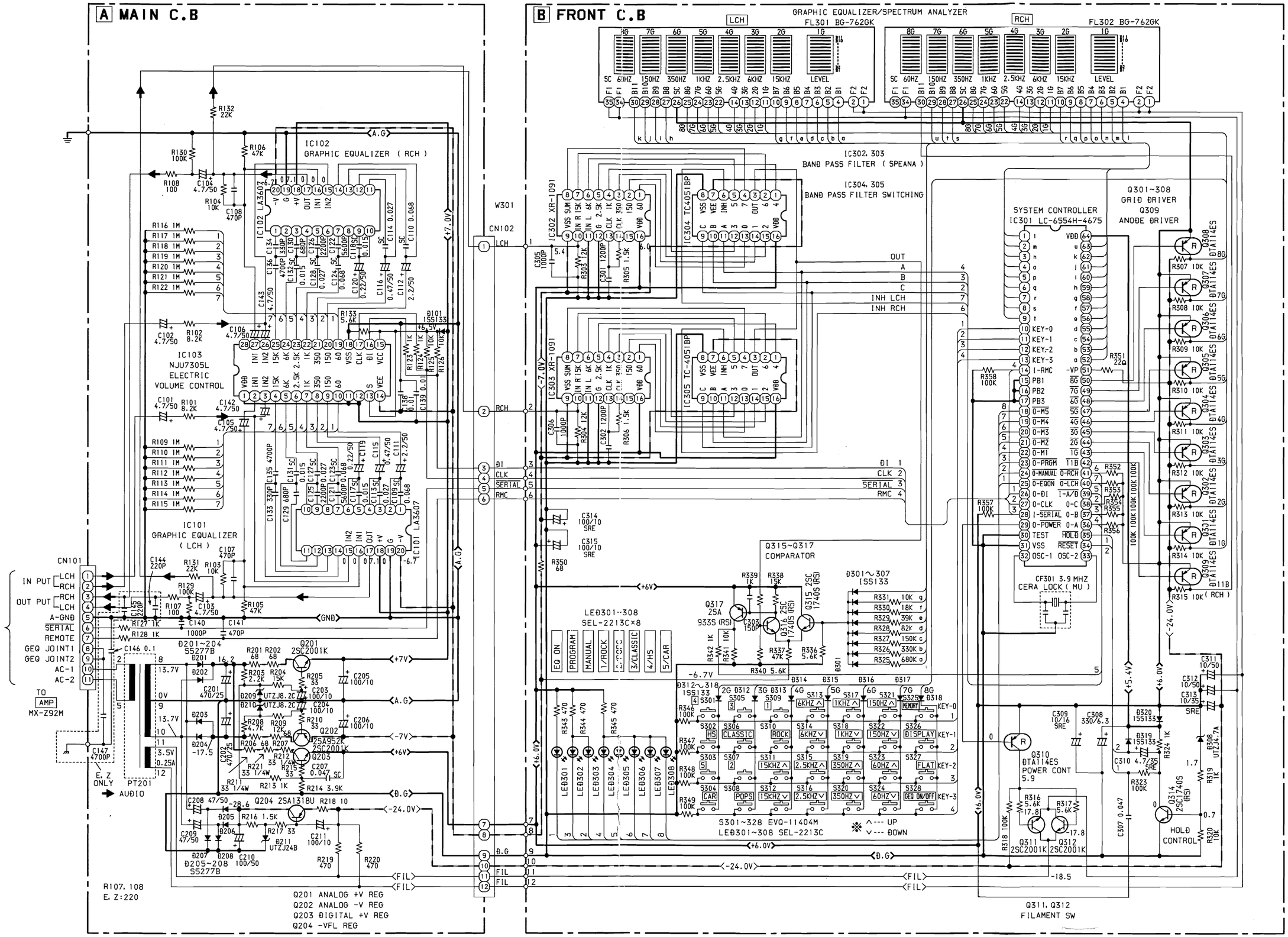
A MAIN C.B
B FRONT C.B
GRAPHIC EQUALIZER/SPECTRUM ANALYZER
FL301 BG-762GK
FL302 BG-762GK
LCH
RCH
SC 60HZ
150HZ
350HZ
1KHZ
2.5KHZ
6KHZ
15KHZ
LEVEL
IC102 GRAPHIC EQUALIZER (RCH)
IC101 GRAPHIC EQUALIZER (LCH)
IC103 NJU7305L ELECTRIC VOLUME CONTROL
IC302, 303 BAND PASS FILTER (SPEANA)
IC304, 305 BAND PASS FILTER SWITCHING
SYSTEM CONTROLLER IC301 LC-6554H-4675
Q301~308 GRID DRIVER Q309 ANODE DRIVER
Q315~Q317 COMPARATOR
LED301~308 SEL-2213C×8
S301~328 EVQ-11404M
LED301~308 SEL-2213C
CF301 3.9 MHZ CERA LOCK (MU)
Q310 DTA114ES POWER CONT
Q311, Q312 FILAMENT SW
HOLD CONTROL
CN101
CN102
W301
TO AMP MX-Z92M
E, Z ONLY
PT201
AUDIO
Q201 ANALOG +V REG
Q202 ANALOG -V REG
Q203 DIGITAL +V REG
Q204 -VFL REG
R107, 108 E, Z:220
FIL SW

B FRONT C.B

FL302

Graphic equalizer /spectrum analyzer display (R CH)

LED308 5/CAR | LED303 MANUAL | LED307 4/HS | LED306 3/CLASSIC

FL301

LED302 PROGRAM | LED305 2/POPS | LED301 EQ ON | LED304 1/ROCK

Graphic equalizer /spectrum analyzer display (L CH)

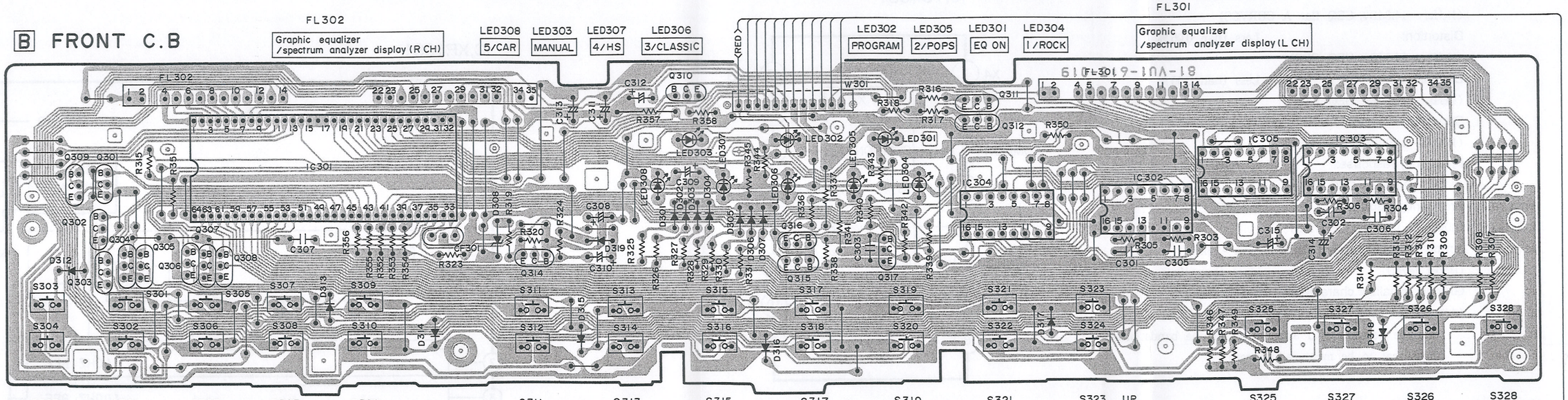

S303 5 | S301 4 | S305 3 | S307 2 | S309 1

S304 CAR | S302 HS | S306 CLASSIC | S308 POPS | S310 ROCK

S311 15KHz ↑ S312 | S313 6KHz ↑ S314 | S315 2.5KHz ↑ S316 | S317 1KHz ↑ S318 | S319 350Hz ↑ S320 | S321 150Hz ↑ S322 | S323 60Hz ↑ S324

S323 UP ^ / DOWN v

S325 MEMORY | S327 FLAT | S326 DISPLAY | S328 GEQ ON/OFF

E,Z MODELS ONLY

A MAIN C.B

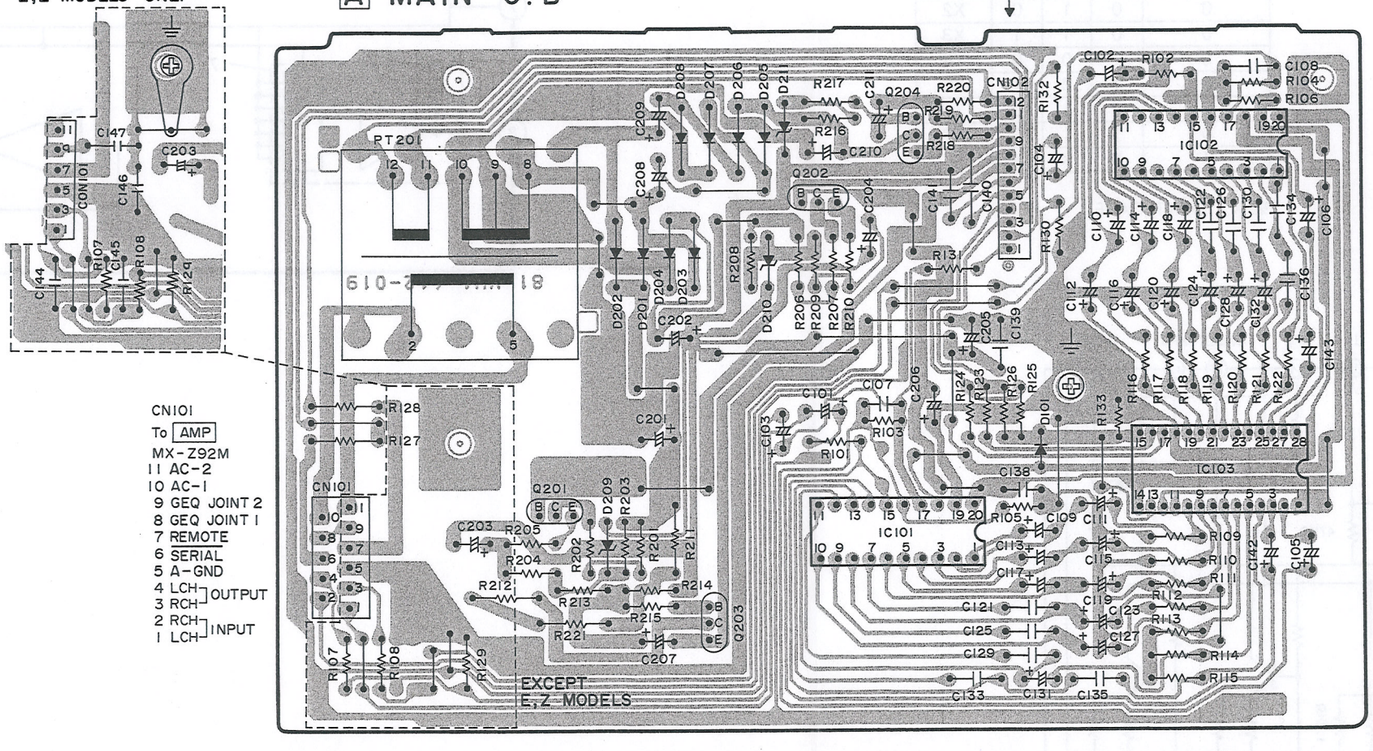

CN101
To AMP
MX-Z92M
11 AC-2
10 AC-1
9 GEQ JOINT 2
8 GEQ JOINT 1
7 REMOTE
6 SERIAL
5 A-GND
4 LCH ┐OUTPUT
3 RCH ┘
2 RCH ┐INPUT
1 LCH ┘

GRAPHIC SYMBOLS PRINTED CIRCUIT BOARD OF ELECT. CAP. ARE DESIGNED AS NEGATIVE POLE.

(プリント基板内のケミコンの極性表示は⊖表示です。)

PRACTICAL SERVICE FIGURE (GE – Z92)

S/N Ratio:	More than 72dB
(1kHz, – 14.0dBv, GEQ flat A CURVES)	
Distortion:	Less than 0.05 %
(1kHz, – 14.0dBv, GEQ OFF)	
Distortion:	Less than 0.05 %
(1kHz, – 14.0dBv, GEQ flat)	
Separation:	More than 63dB
(1kHz, – 14.0dBv, GEQ flat)	
Frequency response:	0 ± 2dB
(20Hz, – 14.0dBv, GEQ flat)	
Frequency response:	0 ± 2dB
(30kHz, – 14.0dBv, GEQ flat)	
Graphic equalizer characteristic:	60Hz~15kHz
(Boost level)	More than 12dB
Graphic equalizer characteristic:	60Hz~15kHz
(Attenuation level)	More than 13dB

- Set the boosting and attenuation of the bands other than that to be measured to zero.

IC BLOCK DIAGRAM (GE – Z92)

IC,TC4051

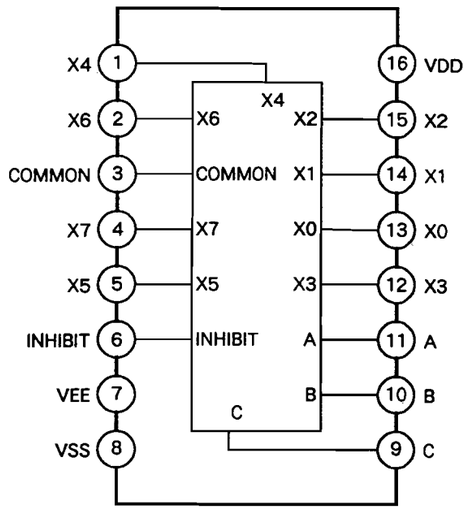

TRUTH TABLE

CONTROL INPUT				ON
INHIBIT	C	B	A	SWITCH
0	0	0	0	X0
0	0	0	1	X1
0	0	1	0	X2
0	0	1	1	X3
0	1	0	0	X4
0	1	0	1	X5
0	1	1	0	X6
0	1	1	1	X7
1	X	X	X	–

※ X : DONT CARE

IC,LA3607

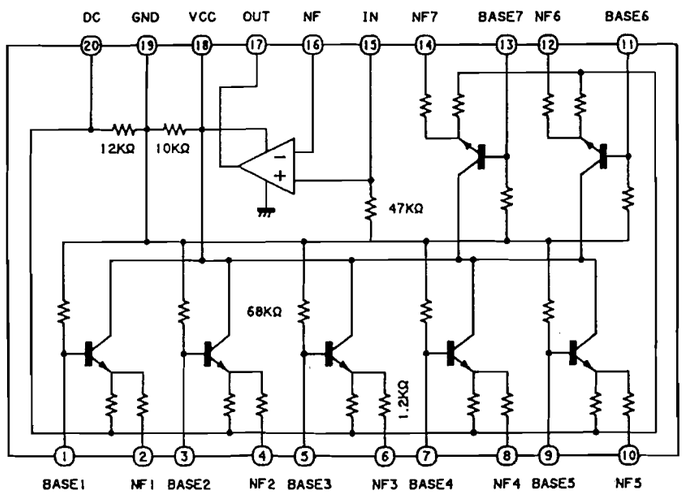

IC,XR1091

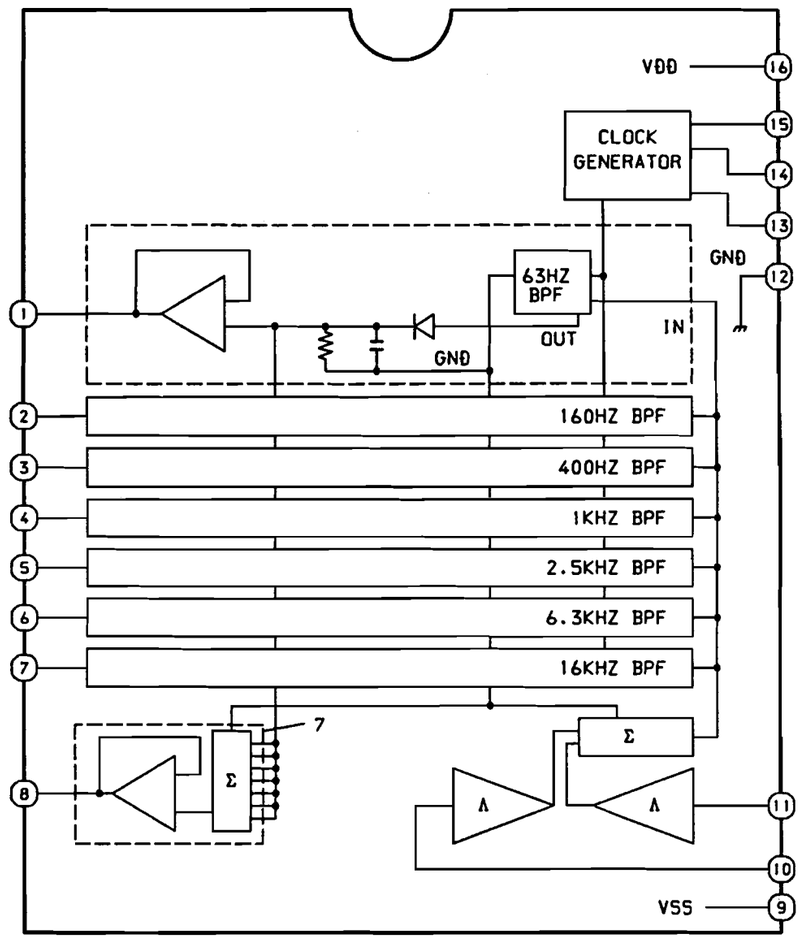

EXPLODED VIEW (GE – Z92)

REF.NO.	PART NO.	DESCRIPTION
A	87-067-660-019	BVT$_2$+3-8 W/O STOL (B)
B	87-067-632-019	BVT$_2$+3-15 W.CONVEX
C	87-067-680-019	BVIT$_3$B+3-10
D	87-743-095-419	UT$_2$+3-8 W/O SLOT (B)
E	81-VU1-202-010	S-SCREW VFT$_2$+3-17

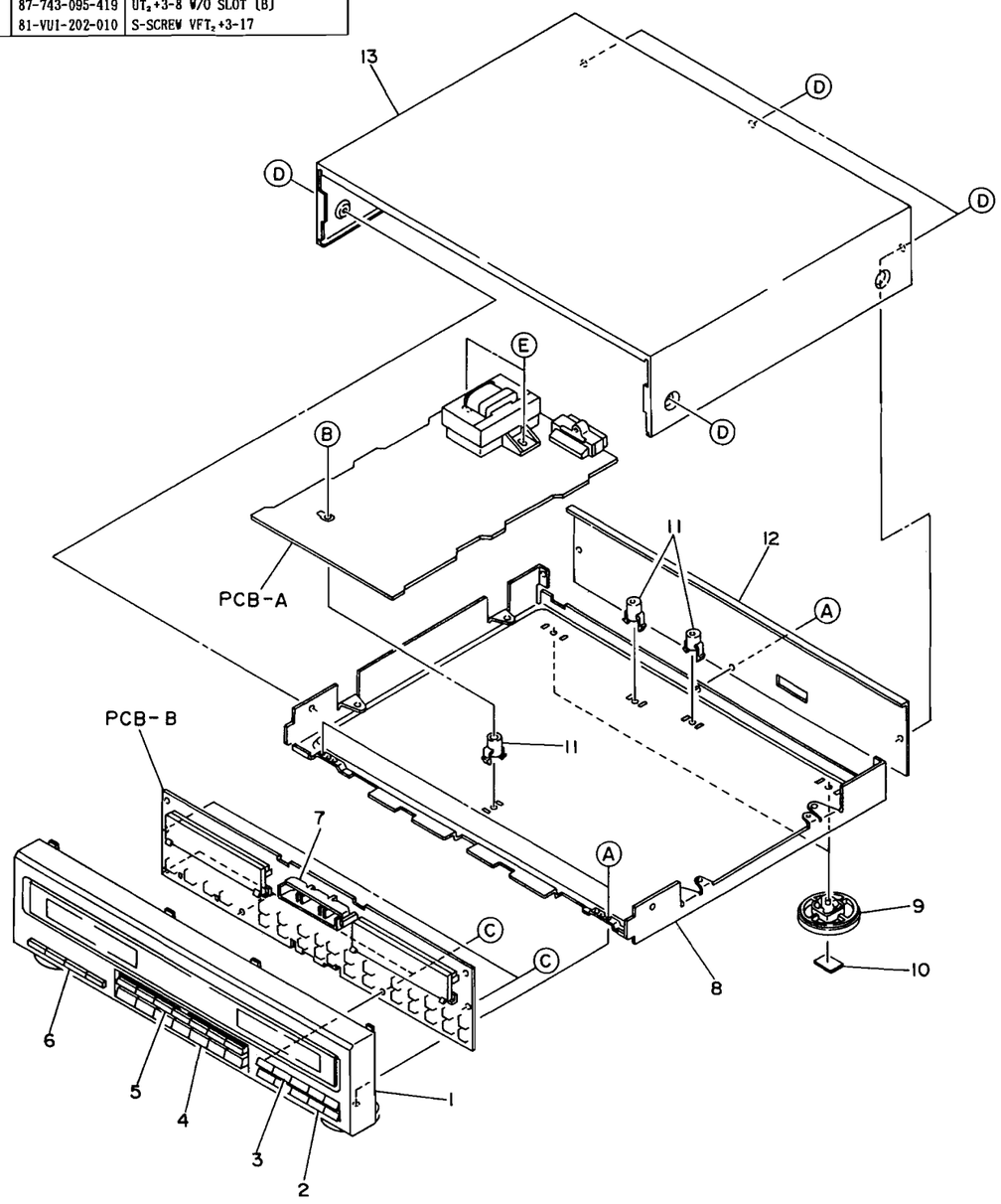

MECHANICAL PARTS LIST (GE – Z92)

PART NO. CHANGED TO	REF. NO.	PART NO.	DESCRIPTION	COMMON MODEL	Q. TY
	1	★09-047-676-010	CABINET FRONT ASSY	*	1
	2	★81-VU1-009-019	KEY, SET 1	*	1
	3	★81-VU1-010-019	KEY, SET 2	*	1
	4	★81-VU1-007-019	KEY, DOWN	*	1
	5	★81-VU1-006-019	KEY, UP	*	1
	6	★81-VU1-008-019	KEY, PRESET	*	1
	7	★81-VU1-201-019	GUIDE, LED	*	1
	8	---	CHASSIS, AMP		1
	9	★81-VX1-012-019	FOOT, REAR		2
	10	★81-VW1-201-019	FELT, 20-15-2		2
	11	---	HOLDER, PCB		3
	12	★81-VU1-011-019	PANEL, REAR(YN)	*	1
	12	★81-VU1-013-019	PANEL, REAR(YK)	*	1
	12	★81-VU1-014-019	PANEL, REAR(YNE)	*	1
	12	★81-VU1-016-019	PANEL, REAR(YJ)	*	1
	13	81-691-032-010	CABINET, STEEL(YN, YJ)		1
	13	81-VU1-021-018	CABINET, STEEL(YK, YNE)	*	1

MODEL NO.

SX – Z92

DISASSEMBLY INSTRUCTION (SX – Z92)

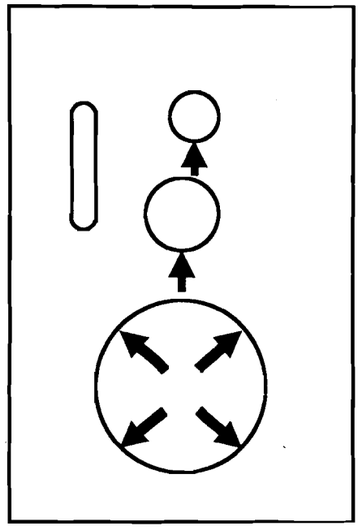

• Insert a flat-bladed screwdriver into the positions indicated by the arrows (shown in the figure on the left) and remove the grille assemblies of the woofer, mid-range speaker and tweeter. Remove the screws of each speaker unit and then remove the speaker units.

• SX – Z92 (3-way speaker system)

EXPLODED VIEW (SX – Z92)

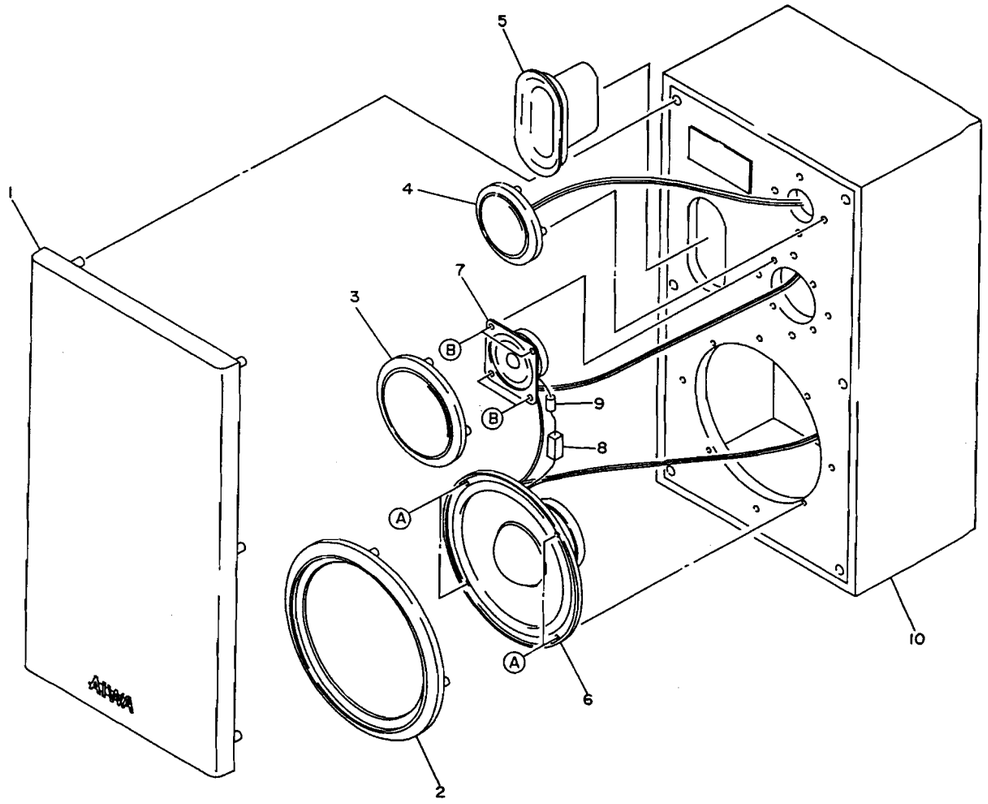

■ SPEAKER LIST (SX – Z92)

PART NO. CHANGED TO	REF. NO.	PART NO.	DESCRIPTION	COMMON MODEL	Q.TY
	1	★81-VS1-010-010	GRILL FRAME ASSY	※	2
	2	★81-VS1-002-010	PANEL,WOOFER	※	2
	3	★81-VS1-004-010	PANEL,M ASSY	※	2
	4	★81-VS1-005-010	PANEL,T ASSY	※	2
	5	★80-VS5-028-010	DUCT		2
	6	81-VS1-604-010	SPEAKER WOOFER	※	2
	7	89-VS5-609-010	SPEAKER TWEETER		2
	8	★83-133-630-010	INDUCTOR 0.3MMH		2
	9	★87-010-007-010	CAP,ELECT 3.3 μ F		2
	10	- - -	CABINET Z92		2

■ ACCESSORIES/PACKAGE LIST

PART NO. CHANGED TO	REF. NO.	PART NO.	DESCRIPTION	COMMON MODEL	Q.TY
	1	★80-VC1-905-010	INSTRUCTION BOOKLET ,E	※	1
	2	★81-VR1-007-019	REMOTE CONTROLLER RC – TZ92MLYBN	※	1
	3	★81-653-647-010	AM LOOP ANTENNA (6T) CON		1
	4	★81-748-632-018	FEEDER ANTENNA FM N		1
	5	★87-043-106-010	FM WIRE ANTENNA (Z)		1